NATIONAL HERBARIUM OF NEW SOUTH WALES

CIVIL WORKS

THESE DESIGNS, DRAWINGS AND SPECIFICATIONS ARE COPYRIGHT AND THE PROPERTY OF SCP CONSULTING AND MUST NOT BE USED, REPRODUCED OR COPIED WHOLLY OR IN PART WITHOUT THE WRITTEN PERMISSION OF SCP CONSULTING

DIAL BEFORE YOU DIG
www.1100.com.au

Sheet List Table

Sheet Number	Sheet Title
C1.00	COVER SHEET, DRAWING LIST, LEGEND - HERBARIUM
C1.01	SPECIFICATION NOTES - HERBARIUM
C2.01	KEY PLAN - HERBARIUM
C2.02	SITE PLAN - HERBARIUM
C2.10	BULK EARTHWORKS PLAN HERBARIUM - SHEET 1
C2.11	BULK EARTHWORKS PLAN HERBARIUM - SHEET 2
C2.15	BULK EARTHWORKS CUT FILL PLAN HERBARIUM - SHEET 1
C2.16	BULK EARTHWORKS CUT FILL PLAN HERBARIUM - SHEET 2
C3.01	CIVIL GRADING AND DRAINAGE PLAN HERBARIUM - SHEET 1
C3.02	CIVIL GRADING AND DRAINAGE PLAN HERBARIUM - SHEET 2
C3.03	CIVIL GRADING AND DRAINAGE PLAN HERBARIUM - SHEET 3
C3.04	CIVIL GRADING AND DRAINAGE PLAN HERBARIUM - SHEET 4
C3.05	CIVIL GRADING AND DRAINAGE PLAN HERBARIUM - SHEET 5
C3.06	CIVIL GRADING AND DRAINAGE PLAN HERBARIUM - SHEET 6
C3.20	EXISTING CATCHMENT PLAN - HERBARIUM
C3.21	PROPOSED CATCHMENT PLAN - HERBARIUM
C4.01	PAVEMENT PLAN HERBARIUM - SHEET 1
C4.02	PAVEMENT PLAN HERBARIUM - SHEET 2
C5.01	SOIL SEDIMENT AND EROSION CONTROL PLAN - HERBARIUM
C5.02	SOIL SEDIMENT AND EROSION CONTROL DETAILS - HERBARIUM
C7.01	CIVIL DETAILS HERBARIUM - SHEET 1
C7.02	CIVIL DETAILS HERBARIUM - SHEET 2
C7.03	CIVIL DETAILS HERBARIUM - SHEET 3

CIVIL LEGEND PROPOSED

- DD 900 — DISH DRAIN WITH WIDTH
- TE — TIMBER EDGE
- STORMWATER OVERLAND FLOW PATH
- GRASS LINED SWALE DRAIN (GRASS TO BE LAID KIKUYU OR EQUAL)
- PRAM RAMP
- RW2 — RETAINING WALL AND NUMBER
- P56.20 — FINISHED SURFACE LEVEL
- EX56.20 — EXISTING SURFACE LEVEL
- BEL 126.00 — BULK EARTHWORKS LEVEL
- 56.2 — FINISHED SURFACE CONTOUR
- GRATED DRAIN
- SSD CO — SUBSOIL DRAINAGE LINE WITH CLEAR OUT
- 1 4 — BATTER WITH SLOPES 1(VERT): 4(HORIZONTAL) UNO
- STORMWATER DRAINAGE HEADWALL (REFER STORMWATER DRAINAGE STRUCTURES SCHEDULE)
- SW DP — DOWNPIPE CONNECTION (Ø150 uPVC UNO)
- (COS) — CONFIRM ON SITE
- STORMWATER DRAINAGE STRUCTURE
- RW RW — RAINWATER REUSE
- SW SW — STORMWATER DRAINAGE LINE WITH;
- SJ SJ — SAWCUT CONTRACTION JOINT
- IJ IJ — ISOLATION JOINT
- DJ DJ — DOWELLED CONSTRUCTION JOINT
- 2 x N12 STEEL REINFORCEMENT BARS PLACED IN PARALLEL TO ACT AS TRIMMER BARS

LOCALITY PLAN
NTS

Rev	Revision Description	Date
I	ISSUE FOR DA	08.07.2019
H	ISSUE FOR DA	02.07.2019
G	ISSUE FOR DA	26.06.2019
F	ISSUE FOR DA	21.06.2019
E	100% DESIGN DEVELOPMENT	28.05.2019
D	100% DESIGN DEVELOPMENT	22.05.2019
C	ISSUE FOR INFORMATION	02.05.2019
B	ISSUE FOR DA	26.04.2019
A	50% DESIGN DEVELOPMENT	15.04.2019

scp engineers and development consultants
L2 Danchen House
507 Kent St Sydney NSW 2000
ABN 80 003 076 024
T (02) 9267 9312
mail@scpconsult.com.au
www.scpconsult.com.au

Client: FDC

Project: NATIONAL HERBARIUM OF NSW

Title: **COVER SHEET, DRAWING LIST, LEGEND - HERBARIUM**

Scale: NOT TO SCALE

Drawn	Checked	Approved
LW	MP	---

Project Number	Drawing Number	Revision
180111	C1.00	I

PLOTTED BY CAD 08/08/2019 9:28:30 AM SCP Consulting, File Path: K:\180111 Mount Annan Botanical Gardens Herbarium\07. CivilBIM\Drawings\180111 - C1.00 COVER SHEET LEGEND DRAWING LIST - HERBARIUM.dwg

SITEWORKS NOTES

1. ORIGIN OF LEVELS :- AUSTRALIAN HEIGHT DATUM (A.H.D.)
2. CONTRACTOR MUST VERIFY ALL DIMENSIONS AND EXISTING LEVELS ON SITE PRIOR TO COMMENCEMENT OF WORK.
3. ALL WORK IS TO BE UNDERTAKEN IN ACCORDANCE WITH THE DETAILS SHOWN ON THE DRAWINGS, THE SPECIFICATIONS AND THE DIRECTIONS OF THE PRINCIPAL'S REPRESENTATIVE.
4. EXISTING SERVICES HAVE BEEN PLOTTED FROM SUPPLIED DATA AND AS SUCH THEIR ACCURACY CANNOT BE GUARANTEED. IT IS THE RESPONSIBILITY OF THE CONTRACTOR TO ESTABLISH THE LOCATION AND LEVEL OF ALL EXISTING SERVICES PRIOR TO THE COMMENCEMENT OF ANY WORK. ANY DISCREPANCIES SHALL BE REPORTED TO THE PRINCIPAL'S REPRESENTATIVE. CLEARANCES SHALL BE OBTAINED FROM THE RELEVANT SERVICE AUTHORITY.
5. WHERE NEW WORKS ABUT EXISTING THE CONTRACTOR SHALL ENSURE THAT A SMOOTH EVEN PROFILE, FREE FROM ABRUPT CHANGES IS OBTAINED.
6. THE CONTRACTOR SHALL ARRANGE ALL SURVEY SETOUT TO BE CARRIED OUT BY A REGISTERED SURVEYOR.
7. CARE IS TO BE TAKEN WHEN EXCAVATING NEAR EXISTING SERVICES. NO MECHANICAL EXCAVATIONS ARE TO BE UNDERTAKEN OVER COMMUNICATIONS OR ELECTRICAL SERVICES. HAND EXCAVATE IN THESE AREAS.
8. ALL SERVICE TRENCHES UNDER VEHICULAR PAVEMENTS SHALL BE BACKFILLED WITH AN APPROVED ENGINEERED GRANULAR MATERIAL AND COMPACTED TO 98% STANDARD MAXIMUM DRY DENSITY IN ACCORDANCE WITH AS.1289.5.1.1.
9. ALL TRENCH BACKFILL MATERIAL SHALL BE COMPACTED TO THE SAME DENSITY AS THE ADJACENT MATERIAL IN LANDSCAPE AREAS.
10. ON COMPLETION OF PIPE INSTALLATION ALL DISTURBED AREAS MUST BE RESTORED TO ORIGINAL, INCLUDING KERBS, FOOTPATHS, CONCRETE AREAS, GRAVEL AND GRASSED AREAS AND ROAD PAVEMENTS.
11. PROVIDE 10mm WIDE EXPANDING CORK JOINTS BETWEEN CONCRETE PAVEMENTS AND ALL BUILDINGS , WALLS, FOOTINGS, COLUMNS, KERBS, DISHDRAINS, GRATED DRAINS, BOLLARD FOOTINGS ETC
12. CONTRACTOR TO OBTAIN ALL AUTHORITY APPROVALS.
13. ALL BATTERS TO BE GRASSED LINED WITH MINIMUM 100 TOPSOIL AND APPROVED COUCH LAID AS TURF.
14. MAKE SMOOTH TRANSITION TO EXISTING SERVICES AND MAKE GOOD.
15. THE CONTRACTOR SHALL PROVIDE ALL TEMPORARY DIVERSION DRAINS AND MOUNDS TO ENSURE THAT AT ALL TIMES EXPOSED SURFACES ARE FREE DRAINING AND WHERE NECESSARY EXCAVATE SUMPS AND PROVIDE PUMPING EQUIPMENT TO DRAIN EXPOSED AREAS.
16. THESE PLANS SHALL BE READ IN CONJUNCTION WITH APPROVED ARCHITECTURAL, STRUCTURAL, HYDRAULIC AND MECHANICAL DRAWINGS AND SPECIFICATIONS.
17. TRENCHES THROUGH EXISTING ROAD AND CONCRETE PAVEMENTS SHALL BE SAWCUT TO FULL DEPTH OF CONCRETE AND A MIN 50mm IN BITUMINOUS PAVING.
18. ON COMPLETION OF WORKS ALL DISTURBED AREAS MUST BE RESTORED TO ORIGINAL INCLUDING, BUT NOT LIMITED TO, KERBS, FOOTPATHS, CONCRETE AREAS, GRASS AND LANDSCAPED AREAS.

CONCRETE PAVEMENT JOINT NOTES

PJ1. CONCRETE MIX PARAMETERS ;
- MAXIMUM AGGREGATE SIZE 20mm
- FLEXURAL STRENGTH AT 28 DAYS = 3.5MPa
- FLEXURAL STRENGTH AT 90 DAYS = 3.85 MPa
- MAXIMUM WATER / CEMENT RATIO = 0.55
- MAXIMUM SHRINKAGE LIMIT = 650 MICRON STRAINS (AS 1012 Pt 13)
- MINIMUM CEMENT CONTENT = 300kg/m3
- CEMENT TO BE TYPE "A" (NORMAL CEMENT) TO AS.1315
- SLUMP = 50mm

PJ2. JOINT TO BE SAWN AS SOON AS CONCRETE HAS HARDENED SUFFICIENTLY THAT IT WILL NOT BE DAMAGED BY SAWING. IF AN UNPLANNED CRACK OCCURS THE CONTRACTOR SHALL REPLACE WHOLE SLABS EITHER SIDE OF THE UNPLANNED CRACK, UNLESS DIRECTED OTHERWISE.

PJ3.
a. CONSTRUCT JOINTS AS DETAILED
b. CONSTRUCTION JOINTS WHERE REQUIRED BUT NOT SHOWN, SHALL BE LOCATED TO THE APPROVAL OF THE ENGINEER AND CONSTRUCTED AT THE CONTRACTORS EXPENSE.
c. ALL LONGITUDINAL CONSTRUCTION JOINTS SHALL BE FORMED AND INCLUDE DOWEL BARS AS SPECIFIED. ALL TRANSVERSE CONSTRUCTION JOINTS SHALL BE FORMED AND INCLUDE DOWEL BARS AS SPECIFIED.
d. BOND BREAKER TO BE TWO (2) UNIFORM COATS OF BITUMEN EMULSION ALL OVER THE EXPOSED SURFACE AND ON END.

PJ4. DOWELS AND TIE BARS TO MEET STRENGTH REQUIREMENTS OF STRUCTURAL GRADE STEEL IN ACCORDANCE AS. 1302. DOWELS AND TIE BARS SHALL BE ;-
- STRAIGHT
- TO LENGTH SPECIFIED
- CLEAN AND FREE FROM MILL SCALE, RUST AND OIL.
- SAWN TO LENGTH NOT CROPPED.

PJ5. DIMENSIONS OF SEALANT RESERVOIR DEPENDANT ON THE SEALANT TYPE ADOPTED. ENGINEERS APPROVAL TO BE OBTAINED FOR SEALANT AND RESERVOIR DIMENSIONS AND DETAIL PROPOSED BY THE CONTRACTOR. REFER DETAIL "B" FOR TYPICAL ARRANGEMENT AND SEALANT.

PJ6. PRIOR TO THE PLACEMENT OF CONCRETE IN THE ADJACENT SLAB, SELF EXPANDING CORK FILLER SHALL BE ADHERED TO THE ALREADY CAST AND CLEANED CONCRETE FACE USING AN APPROVED WATERPROOF ADHESIVE. ADHESIVE SHALL BE LIBERALLY APPLIED TO THE FULL FACE OF THE CONCRETE SLAB TO BE COVERED BY THE FILLER, AND ON THE FULL FACE OF THE FILLER TO BE ADHERED.

PJ7. REFER TO COMPACTION NOTES FOR PREPARATION OF SUB-BASE AND SUB-GRADE.

PJ8. ALL WORK TO BE FINISHED IN ACCORDANCE WITH LANDSCAPE ARCHITECT SPECIFICATION.

STORMWATER NOTES

1. ALL Ø300mm to Ø600mm DRAINAGE PIPES SHALL BE CLASS 4 APPROVED SPIGOT AND SOCKET REINFORCED CONCRETE PIPES WITH RUBBER RING JOINTS (UNO). ALL Ø675mm OR LARGER DRAINAGE PIPES SHALL BE CLASS 3 APPROVED SPIGOT AND SOCKET REINFORCED CONCRETE PIPES WITH RUBBER RING JOINTS (UNO).
2. ALL DRAINAGE PIPES LESS THAN OR EQUAL TO Ø300mm SHALL BE uPVC DWV GRADE CLASS SN8 IN ACCORDANCE WITH AS/NZS1260:2009-PVC-U PIPES AND FITTINGS FOR DRAIN, WASTE AND VENT APPLICATION WITH SOLVENT WELDED JOINTS.
3. EQUIVALENT STRENGTH FIBROUS REINFORCED CONCRETE AND/OR VITRIFIED CLAY PIPE MAY BE USED SUBJECT TO APPROVAL BY THE SUPERINTENDENT.
4. PIPES FOR SUB-SOIL DRAINS SHALL BE SLOTTED 100MM DIAMETER CLASS 1000 WRAPPED IN GEOFABRIC, UNO, COMPLYING WITH THE REQUIREMENTS OF AS 2439
5. ALL PIPE JUNCTIONS UP TO AND INCLUDING 450 DIA. AND TAPERS SHALL BE VIA PURPOSE MADE FITTINGS.
6. ALL MILD STEEL FIXTURES INCLUDING GRATES, FRAMES, STEP IRONS, LADDERS, ETC., SHALL BE HOT DIP GALVANISED. GALVANISING SHALL COMPLY WITH THE REQUIREMENTS OF AS 1214 OR AS 1650, AS APPROPRIATE.
7. MINIMUM GRADE TO STORMWATER LINES TO BE 1%. (U.N.O.)
8. CONTRACTOR TO SUPPLY AND INSTALL ALL FITTINGS AND SPECIALS INCLUDING VARIOUS PIPE ADAPTORS TO ENSURE PROPER CONNECTION BETWEEN DISSIMILAR PIPEWORK.
9. ALL CONNECTIONS TO EXISTING DRAINAGE PITS SHALL BE MADE IN A TRADESMAN-LIKE MANNER AND THE INTERNAL WALL OF THE PIT AT THE POINT OF ENTRY SHALL BE CEMENT RENDERED TO ENSURE A SMOOTH FINISH.
10. PRECAST PITS SHALL NOT BE USED UNLESS WRITTEN APPROVAL IS OBTAINED FROM THE SUPERINTENDENT.
11. WHERE TRENCHES ARE IN ROCK, THE PIPE SHALL BE BEDDED ON A MIN. 50MM CONCRETE BED (OR 75MM THICK BED OF 12MM BLUE METAL) UNDER THE BARREL OF THE PIPE. THE PIPE COLLAR AT NO POINT SHALL BEAR ON THE ROCK. IN OTHER THAN ROCK, PIPES SHALL BE LAID ON A 75MM THICK SAND BED. IN ALL CASES BACKFILL THE TRENCH WITH SAND TO 200MM ABOVE THE PIPE. WHERE THE PIPE IS UNDER PAVEMENTS BACKFILL REMAINDER OF TRENCH WITH SAND OR APPROVED GRANULAR BACKFILL COMPACTED IN 150MM LAYERS TO 98% STANDARD MAX. DRY DENSITY.
12. BEDDING SHALL BE (U.N.O.) TYPE H1, AS SPECIFIED IN AS 3725.
13. BACKFILL TRENCH WITH SAND OR APPROVED GRANULAR BACKFILL TO 300mm(MIN) ABOVE THE PIPE. WHERE THE PIPE IS UNDER PAVEMENTS BACKFILL REMAINDER OF TRENCH TO PAVEMENT SUBGRADE WITH SAND OR APPROVED GRAVEL SUB-BASE COMPACTED IN 150mm LAYERS TO 98% STANDARD MAXIMUM DRY DENSITY. THE CONTRACTOR IS TO ENSURE COMPACTION EQUIPMENT IS APPROPRIATE FOR THE PIPE CLASS USED
14. WHERE STORMWATER LINES PASS UNDER FLOOR SLABS DWV GRADE uPVC RUBBER RING JOINTS ARE TO BE USED (UNO).
15. WHERE SUBSOIL DRAINAGE LINES PASS UNDER FLOOR SLABS AND VEHICULAR PAVEMENTS, UNSLOTTED uPVC DWV GRADE CLASS SN8 PIPE SHALL BE USED.
16. 100mm DIA. SUBSOIL DRAINAGE PIPE 3m LONG WRAPPED IN FILTER SOCK TO BE PROVIDED IN PIPE TRENCHES UPSTREAM OF ALL PITS.
17. CONTRACTOR TO SUPPLY AND INSTALL ALL FITTINGS AND SPECIALS INCLUDING VARIOUS PIPE ADAPTORS TO ENSURE PROPER CONNECTION BETWEEN DISSIMILAR PIPEWORK.
18. PITS DEEPER THAN 1000mm SHALL HAVE STEP IRONS INSTALLED IN ACCORDANCE WITH THE LOCAL OR STATUTORY AUTHORITY REQUIREMENTS

COMPACTION NOTES

1. STRIP TOPSOIL TO EXPOSE NATURALLY OCCURRING MATERIAL AND STOCKPILE ON SITE FOR SELECTIVE RE-USE OR DISPOSE OFF-SITE AS DIRECTED BY THE SUPERINTENDENT.
2. WHERE FILLING IS REQUIRED TO ACHIEVE DESIGN SUBGRADE PROOF ROLL EXPOSED NATURAL SURFACE WITH A MINIMUM OF TEN PASSES OF A VIBRATING ROLLER (MINIMUM STATIC WEIGHT OF 10 TONNES) IN THE PRESENCE OF THE SUPERINTENDENT. REFER TO SPECIFICATION FOR DETAILS.
3. ALL SOFT, WET OR UNSUITABLE MATERIAL TO BE REMOVED AS DIRECTED BY THE SUPERINTENDENT AND REPLACED WITH APPROVED MATERIAL SATISFYING THE REQUIREMENTS LISTED BELOW.
4. ALL FILL MATERIAL SHALL BE FROM A SOURCE APPROVED BY THE SUPERINTENDENT AND SHALL COMPLY WITH THE FOLLOWING :
   a. FREE FROM ORGANIC, PERISHABLE AND CONTAMINATED MATTER
   b. MAXIMUM PARTICLE SIZE 75MM
   c. PLASTICITY INDEX BETWEEN 2% AND 15%
5. ALL FILL MATERIAL SHALL BE PLACED IN MAXIMUM 200MM THICK LAYERS AND COMPACTED AT OPTIMUM MOISTURE CONTENT (+ OR - 2%) TO ACHIEVE A DRY DENSITY DETERMINED IN ACCORDANCE WITH AS 1289 E3.1 OF NOT LESS THAN THE FOLLOWING STANDARD MINIMUM DRY DENSITY IN ACCORDANCE WITH AS 1289 E1.1 :

LOCATION	STANDARD DRY DENSITY
UNDER BUILDING SLABS	98%
AREAS OF SERVICE TRENCHES	98%
EXTERNAL PAVED AREAS, ROADS AND CARPARKS	98%
LANDSCAPED AREAS	90%

6. THE CONTRACTOR SHALL PROGRAM THE EARTHWORKS OPERATION SO THAT THE WORKING AREAS ARE ADEQUATELY DRAINED DURING THE PERIOD OF CONSTRUCTION. THE SURFACE SHALL BE GRADED AND SEALED OFF TO REMOVE DEPRESSIONS, ROLLER MARKS AND SIMILAR WHICH WOULD ALLOW WATER TO POND AND PENETRATE THE UNDERLYING MATERIAL. ANY DAMAGE RESULTING FROM THE CONTRACTOR NOT OBSERVING THESE REQUIREMENTS SHALL BE RECTIFIED BY THE CONTRACTOR AT THEIR COST.
7. TESTING OF THE SUBGRADE SHALL BE CARRIED OUT BY AN APPROVED NATA REGISTERED LABORATORY AT THE CONTRACTORS EXPENSE.

CONCRETE NOTES

GENERAL

1. ALL WORKMANSHIP AND MATERIALS SHALL COMPLY WITH AS 3600 CURRENT EDITIONS WITH AMENDMENTS, AND THE ACSE CONCRETE SPECIFICATION EXCEPT WHERE VARIED BY THE CONTRACT DOCUMENTS.
2. VERIFY ALL SETTING OUT DIMENSIONS WITH THE ARCHITECT AND/OR THE SURVEYOR.
3. DO NOT OBTAIN DIMENSIONS BY SCALING THE DRAWINGS.

CONCRETE

1. PLACE CONCRETE OF THE FOLLOWING CHARACTERISTIC COMPRESSIVE STRENGTH F"C AS DEFINED IN AS.3600 OR M.R. FORM 609. ADD WATER REDUCING ADMIXTURE EQUAL TO WRDA.

LOCATION	AS.3600 F'c MPa AT 28 DAYS	SPECIFIED SLUMP	NOMINAL AGG. SIZE
ALL KERB, ETC.	25	80	20
VEHICULAR PAVEMENTS	32	80	20

2. USE "A.C.S.E. SPECIFICATION TYPE A" CEMENT.
3. ALL CONCRETE SHALL BE SUBJECT TO PROJECT CONTROL SAMPLE AND TESTING TO AS.3600.
4. CONSOLIDATE BY VIBRATION.

REINFORCEMENT

1. FIX REINFORCEMENT AS SHOWN ON DRAWINGS. THE TYPE AND GRADE IS INDICATED BY A SYMBOL AS SHOWN BELOW. ON THE DRAWING N IS FOLLOWED BY A NUMERAL WHICH INDICATES THE SIZE IN MILLIMETRES. A MARK NUMERAL (IF USED) FOLLOWS THIS NUMERAL.
   N. HOT ROLLED DEFORMED BAR, GRADE 410Y
   S. HOT ROLLED DEFORMED BAR, GRADE 230S
   R. PLAIN ROUND BAR, GRADE 230R
   SL. HARD DRAWN WIRE FABRIC.
2. PROVIDE BAR SUPPORTS OR SPACERS TO GIVE THE FOLLOWING CONCRETE COVER TO ALL REINFORCEMENT UNLESS NOTED OTHERWISE.

   FOOTINGS
   - 75 BOTTOM, 65 TOP AND SIDES SLABS
   - 2O TOP AND BOTTOM, 30 WHEN EXPOSED TO WEATHER.

   BEAMS
   - 50 BOTTOM AND SIDES (TO STIRRIPS) TOP COVER AS DETAILED COLUMNS
   - 40 TO TIES AND SPIRALS 50 WHEN EXPOSED TO WEATHER

   WALLS
   - 25 GENERALLY 30 WHEN CAST IN FORMS BUT LATER EXPOSED TO WEATHER OR GROUND.
   - 65 WHEN CAST DIRECTLY IN CONTACT WITH GROUND.

CURING

1. CONCRETE SHALL BE CURED FOR A MINIMUM OF 7 DAYS FROM START OF CURING PROCESS.
2. COMMENCE CURING PROCESS ONCE ALL FREE WATER HAS DISAPPEARED FROM CONCRETE SURFACE.
3. FOR MEMBRANE CURING THE WHOLE EXPOSED SURFACE SHALL BE EVENLY COATED. TWO COATS SHALL BE APPLIED IN PERPENDICULAR DIRECTIONS AT NO MORE THAN $4m^2/L$.
4. ANY OTHER METHODS OF CURING SHALL BE SUBJECT TO APPROVAL BY THE ENGINEER OR IN ACCORDANCE WITH THE SPECIFICATION.

EARTHWORKS NOTES

EW1 ALL WORK SHALL COMPLY WITH AS3798 (2007) - GUIDELINES ON EARTHWORKS FOR COMMERCIAL AND RESIDENTIAL DEVELOPMENTS.

EW2 REFER TO BELOW GEOTECHNICAL INVESTIGATION REPORT FOR GEOTECHNICAL ENGINEER'S RECOMMENDATIONS:-
GEOTECHNICAL ENGINEER: JK GEOTECHNICS
REPORT REFERNCE NUMBER: 30591PN2
DATE: 2 FEBRUARY 2019

EW3 AFTER DEMOLITION STRIP REMAINING TOPSOIL THROUGHOUT TO EXPOSE NATURALLY OCCURRING AND ENGINEERING MATERIAL AND STOCKPILE ON SITE FOR REUSE AS DIRECTED BY THE SUPERINTENDENT.

EW4 EXCAVATE TO SUB-GRADE LEVELS, SEGREGATING AND STOCKPILING MATERIALS FOR LATER REUSE.

EW5 COMPACT THE EXPOSED SUB-GRADE WITH A 8-10 TONNE VIBRATORY ROLLER (WITH A SMOOTH DRUM). IT MAY BE NECESSARY TO TURN OFF THE VIBRATORY EFFECT. GEOTECHNICAL ENGINEER TO ADVISE.

EW6 GEOTECHNICAL ENGINEER TO ADVISE ON THE EXTENT OF ROLLING/ COMPACTION REQUIRED.

EW7 THE UPPER 300mm OF THE COMPLETED SUB-GRADE IS TO BE COMPACTED TO A DENSITY OF AT LEAST 98% SMDD (AS 1289.5.6.1 - 1998).

EW8 AREAS SHOWING HEAVING UNDER COMPACTION EQUIPMENT SHOULD BE EXCAVATED AT THE DIRECTION OF THE GEOTECHNICAL ENGINEER AND REPLACED WITH COMPACTED FILLING TO A DENSITY OF AT LEAST 98% SMDD.

EW9 ALL FILL MATERIAL SHALL BE FROM A SOURCE APPROVED BY THE SUPERINTENDENT AND SHALL COMPLY WITH THE FOLLOWING -
a) FREE FROM ORGANIC AND PERISHABLE MATTER,
b) MAXIMUM PARTICLE SIZE 75mm,
c) PLASTICITY INDEX - BETWEEN 2% AND 15%.

EW10 ALL FILL MATERIAL SHALL BE PLACED IN MAXIMUM 200mm THICK LAYERS AND COMPACTED AT OPTIMUM MOISTURE CONTENT (+ OR - 2%) TO ACHIEVE A DRY DENSITY DETERMINED IN ACCORDANCE WITH AS1289.5.1.1-2003-METHODS OF TESTING SOILS FOR ENGINEERING PURPOSES OF NOT LESS THAN THE FOLLOWING STANDARD MINIMUM DRY DENSITY -

LOCATION	STANDARD DRY DENSITY
UNDER BUILDING SLABS	98%
VEHICULAR PAVED AREAS	100%
NON-VEHICULAR PAVED AREAS	98%
LANDSCAPED AREAS	95%

EW11 THE CONTRACTOR SHALL SUBMIT ALL COMPACTION RECORDS AND GEOTECHNICAL REPORTS/ INSTRUCTIONS TO SCP CONSULTING FOR APPROVAL.

EW12 THE CONTRACTOR SHALL PROGRAM THE EARTHWORKS OPERATION SO THAT THE WORKING AREAS ARE ADEQUATELY DRAINED DURING THE PERIOD OF CONSTRUCTION. THE SURFACE SHALL BE GRADED AND SEALED OFF TO REMOVE DEPRESSIONS, ROLLER MARKS AND SIMILAR WHICH WOULD ALLOW WATER TO POND AND PENETRATE THE UNDERLYING MATERIAL. ANY DAMAGE RESULTING FROM THE CONTRACTOR NOT OBSERVING THESE REQUIREMENTS SHALL BE RECTIFIED BY THE CONTRACTOR AT THEIR OWN EXPENSE.

EW13 TESTING OF THE FILL MATERIAL SHALL BE CARRIED OUT BY AN APPROVED NATA REGISTERED LABORATORY AT THE CONTRACTORS EXPENSE.

EW14 PROPOSED BULK EARTHWORKS SURFACE LEVEL SHOWN DOES NOT INCLUDE THE LANDSCAPE TOPSOIL SETDOWNS.

EW15 EXISTING SURFACE LEVEL SHOWN DOES NOT INCLUDE STRIPPING.

THESE DESIGNS, DRAWINGS AND SPECIFICATIONS ARE COPYRIGHT AND THE PROPERTY OF SCP CONSULTING AND MUST NOT BE USED, REPRODUCED OR COPIED WHOLLY OR IN PART WITHOUT THE WRITTEN PERMISSION OF SCP CONSULTING

DIAL BEFORE YOU DIG www.1100.com.au

Rev	Revision Description	Date
F	ISSUE FOR DA	02.07.2019
E	ISSUE FOR DA	26.06.2019
D	ISSUE FOR DA	21.06.2019
C	100% DESIGN DEVELOPMENT	28.05.2019
B	90% DESIGN DEVELOPMENT	28.08.2019
A	50% DESIGN DEVELOPMENT	15.04.2019

scp engineers and development consultants
L2 Danchen House
507 Kent St Sydney NSW 2000
ABN 80 003 076 024
T (02) 9267 9312
mail@scpconsult.com.au
www.scpconsult.com.au

Client: FDC

Project: NATIONAL HERBARIUM OF NSW

Title: **SPECIFICATION NOTES**

Scale: NOT TO SCALE

Drawn	Checked	Approved
LW	MP	---

Project Number	Drawing Number	Revision
180111	C1.01	F

PLOTTED BY CAD 03/12/2019 - 8:12:28 AM SCP Consulting, File Path: K:\180111 Mount Annan Botanical Gardens Herbarium\07 CAD\BIM\Drawings\180111_C1.00.dwg

THESE DESIGNS, DRAWINGS AND SPECIFICATIONS ARE COPYRIGHT AND THE PROPERTY OF SCP CONSULTING AND MUST NOT BE USED, REPRODUCED OR COPIED WHOLLY OR IN PART WITHOUT THE WRITTEN PERMISSION OF SCP CONSULTING

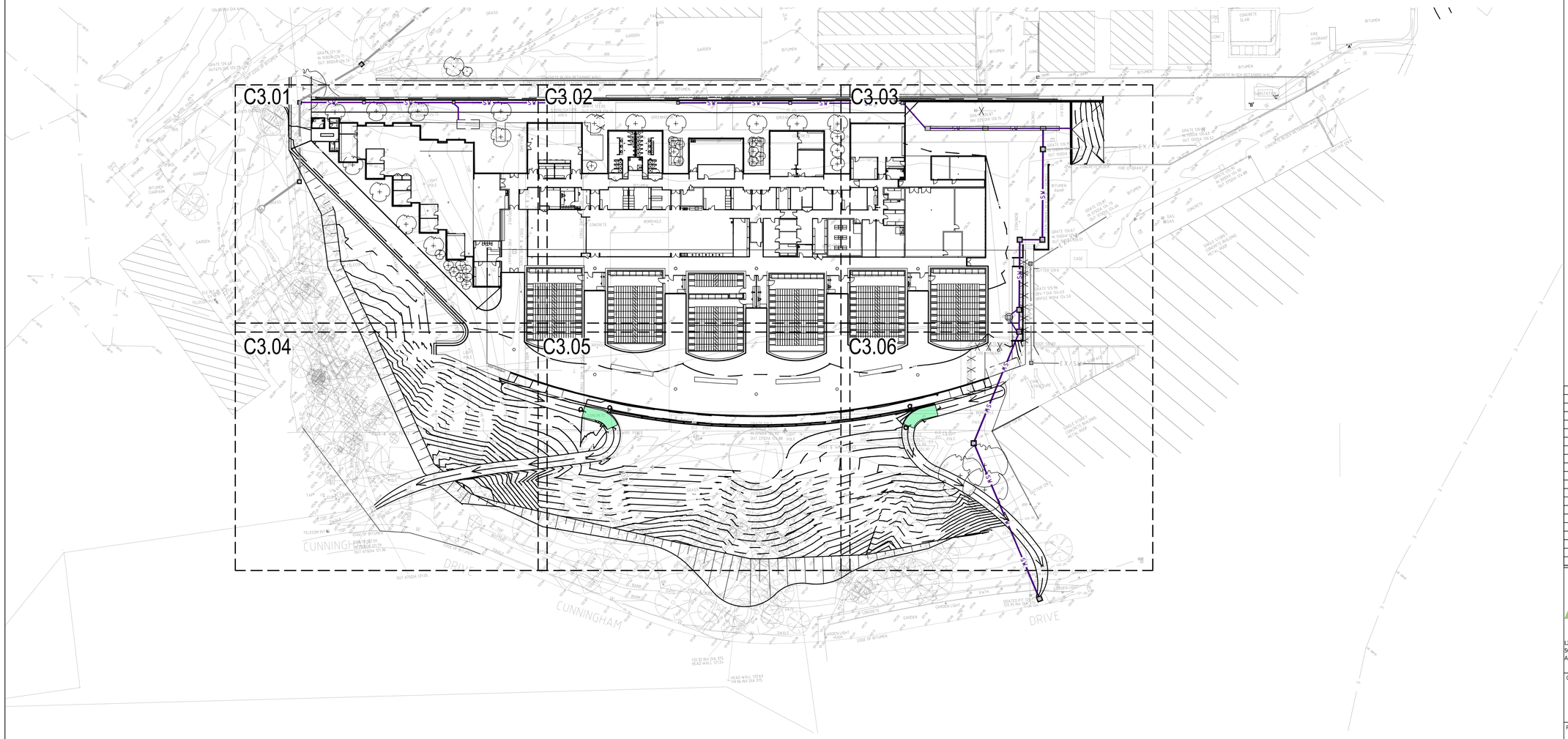

NORTH

DIAL BEFORE YOU DIG
www.1100.com.au

Rev	Revision Description	Date
K	ISSUE FOR DA	11.07.2019
J	ISSUE FOR DA	02.07.2019
I	ISSUE FOR DA	27.06.2019
H	ISSUE FOR DA	26.06.2019
G	ISSUE FOR DA	21.06.2019
F	100% DESIGN DEVELOPMENT	17.06.2019
E	100% DESIGN DEVELOPMENT	28.05.2019
D	100% DESIGN DEVELOPMENT	22.05.2019
C	ISSUE FOR DA	02.05.2019
B	ISSUE FOR DA	27.04.2019
A	50% DESIGN DEVELOPMENT	15.04.2019

scp engineers and development consultants

L2 Danchen House
507 Kent St Sydney NSW 2000
ABN 80 003 076 024

T (02) 9267 9312
mail@scpconsult.com.au
www.scpconsult.com.au

Client: FDC

Project: NATIONAL HERBARIUM OF NSW

Title: **KEY PLAN - HERBARIUM**

Scale: 0 5000 12500
1:250 @ A1

Drawn	Checked	Approved
LW	MP	---

Project Number	Drawing Number	Revision
180111	C2.01	K

PLOTTED BY CAD 11/28/2019 2:29:40 PM SCP Consulting, File Path: K:\180111 Mount Annan Botanical Gardens Herbarium\07 CAD\BIM\Drawings\180111_C2.01 KEY PLAN - HERBARIUM.dwg

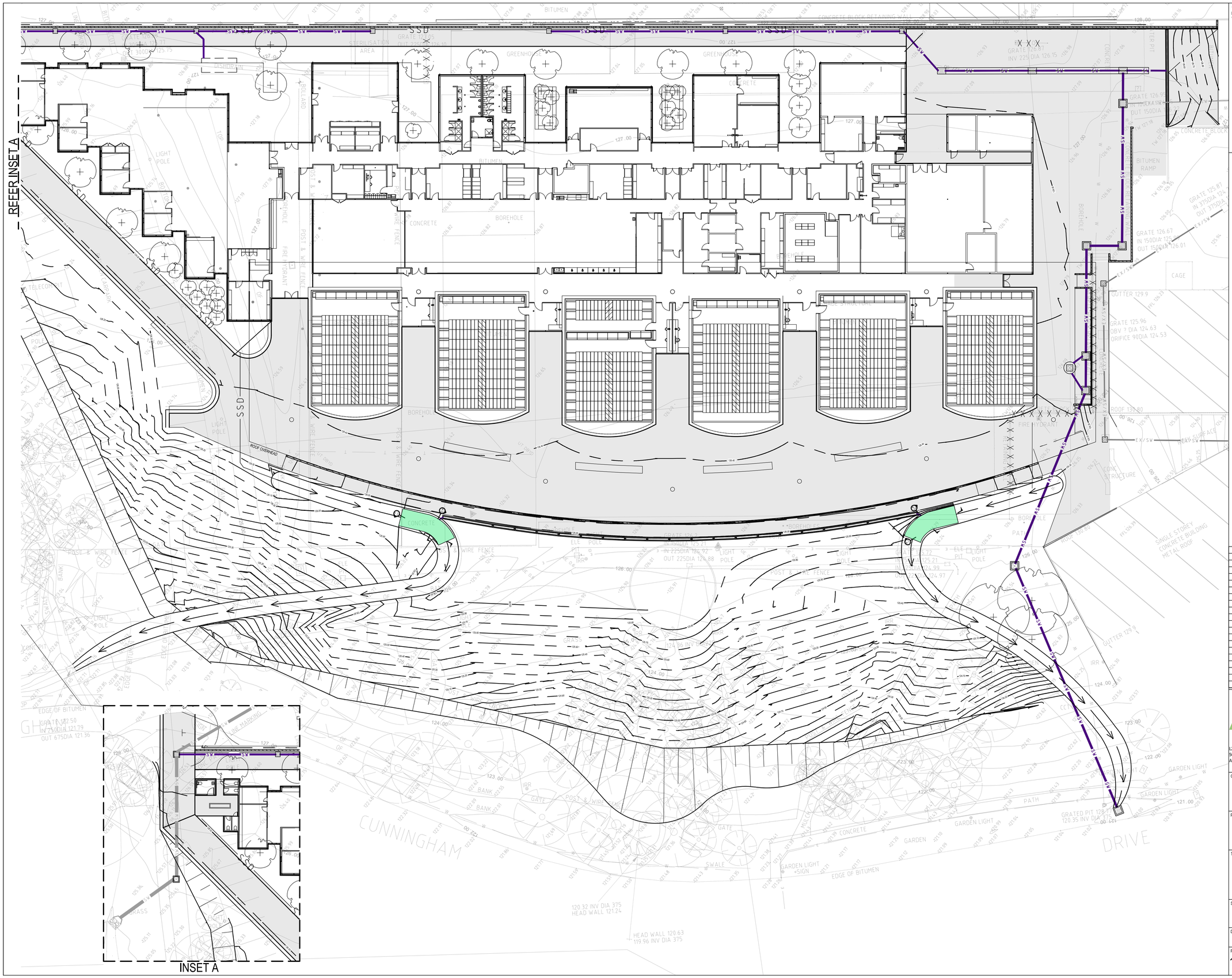

THESE DESIGNS, DRAWINGS AND SPECIFICATIONS ARE COPYRIGHT AND THE PROPERTY OF SCP CONSULTING AND MUST NOT BE USED, REPRODUCED OR COPIED WHOLLY OR IN PART WITHOUT THE WRITTEN PERMISSION OF SCP CONSULTING

DIAL BEFORE YOU DIG
www.1100.com.au

Rev	Revision Description	Date
G	ISSUE FOR DA	11.07.2019
F	ISSUE FOR DA	02.07.2019
E	ISSUE FOR DA	27.06.2019
D	ISSUE FOR DA	26.06.2019
C	ISSUE FOR DA	21.06.2019
B	ISSUE FOR INFORMATION	17.06.2019
A	ISSUE FOR INFORMATION	02.05.2019

scp engineers and development consultants
L2 Danchen House
507 Kent St Sydney NSW 2000
ABN 80 003 076 024
T (02) 9267 9312
mail@scpconsult.com.au
www.scpconsult.com.au

Client: FDC

Project: NATIONAL HERBARIUM OF NSW

Title: **SITE PLAN - HERBARIUM**

Scale: 0 5000 12500
1:250 @ A1

Drawn	Checked	Approved
LW	MP	---

Project Number	Drawing Number	Revision
180111	C2.02	G

PLOTTED BY CAD 11/07/2019 2:31:56 PM SCP Consulting, File Path: K:\180111 Mount Annan Botanical Gardens Herbarium\07. CAD\BIM\Drawings\180111_C2.01 KEY PLAN - HERBARIUM.dwg

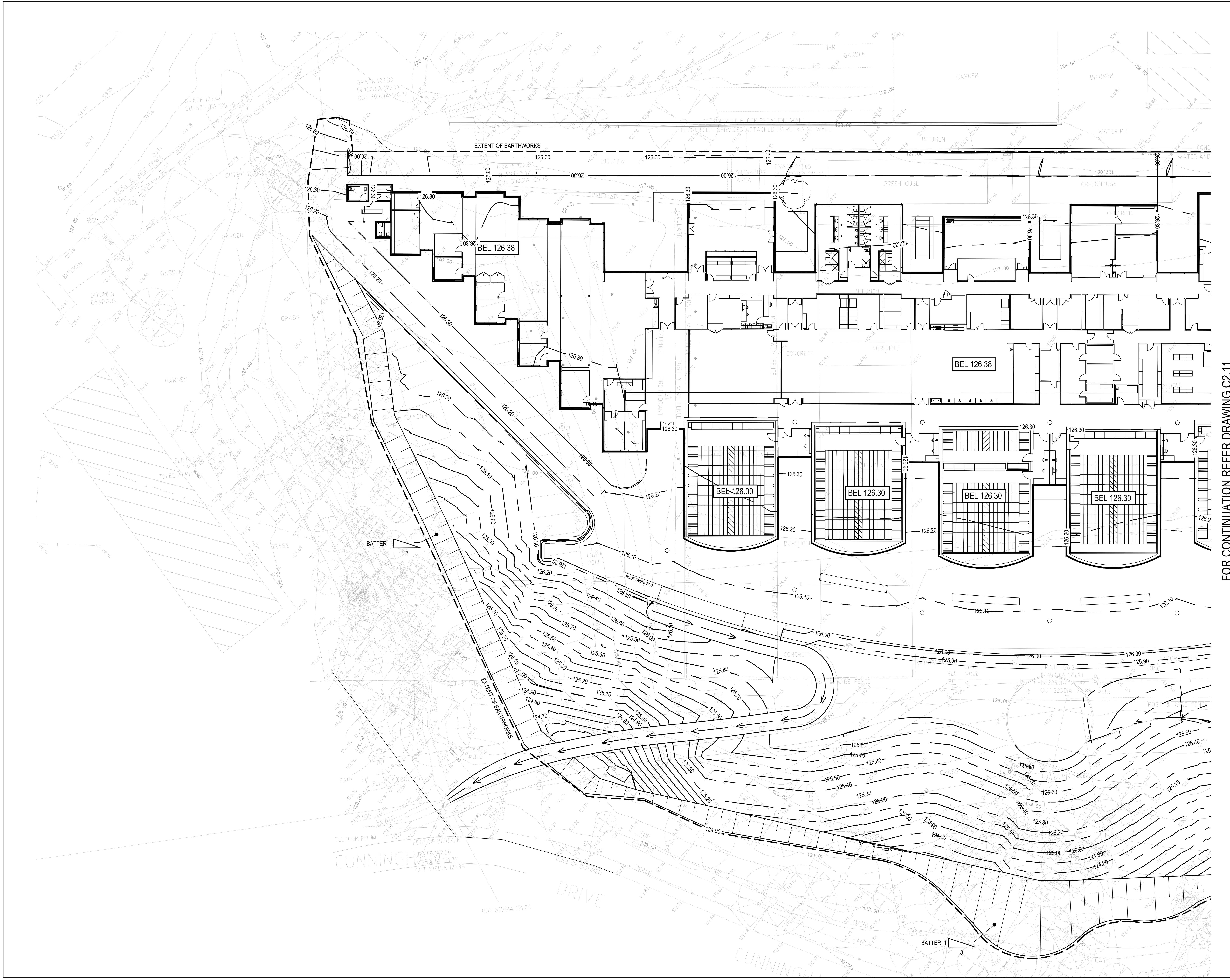

THESE DESIGNS, DRAWINGS AND SPECIFICATIONS ARE COPYRIGHT AND THE PROPERTY OF SCP CONSULTING AND MUST NOT BE USED, REPRODUCED OR COPIED WHOLLY OR IN PART WITHOUT THE WRITTEN PERMISSION OF SCP CONSULTING

NORTH

DIAL BEFORE YOU DIG
www.1100.com.au

CUT/FILL VOLUMES
CUT - 2844.032 cu.m
FILL - 3219.410 cu.m

NET - 375.378 cu.m FILL

200mm STRIPPED TOPSOIL ACROSS SITE - 2,590 cu.m

Rev	Revision Description	Date
F	ISSUE FOR DA	02.07.2019
E	ISSUE FOR DA	26.06.2019
D	ISSUE FOR DA	21.06.2019
C	ISSUE FOR INFORMATION	19.06.2019
B	ISSUE FOR DA	26.04.2019
A	50% DESIGN DEVELOPMENT	15.04.2019

scp engineers and development consultants
L2 Danchen House
507 Kent St Sydney NSW 2000
ABN 80 003 076 024
T (02) 9267 9312
mail@scpconsult.com.au
www.scpconsult.com.au

Client: FDC

Project: NATIONAL HERBARIUM OF NSW

Title: **BULK EARTHWORKS PLAN - SHEET 1**

Scale: 0 5000 12500 — 1:250 @ A1

Drawn	Checked	Approved
LW	MP	---

Project Number	Drawing Number	Revision
180111	C2.10	F

THESE DESIGNS, DRAWINGS AND SPECIFICATIONS ARE COPYRIGHT AND THE PROPERTY OF SCP CONSULTING AND MUST NOT BE USED, REPRODUCED OR COPIED WHOLLY OR IN PART WITHOUT THE WRITTEN PERMISSION OF SCP CONSULTING

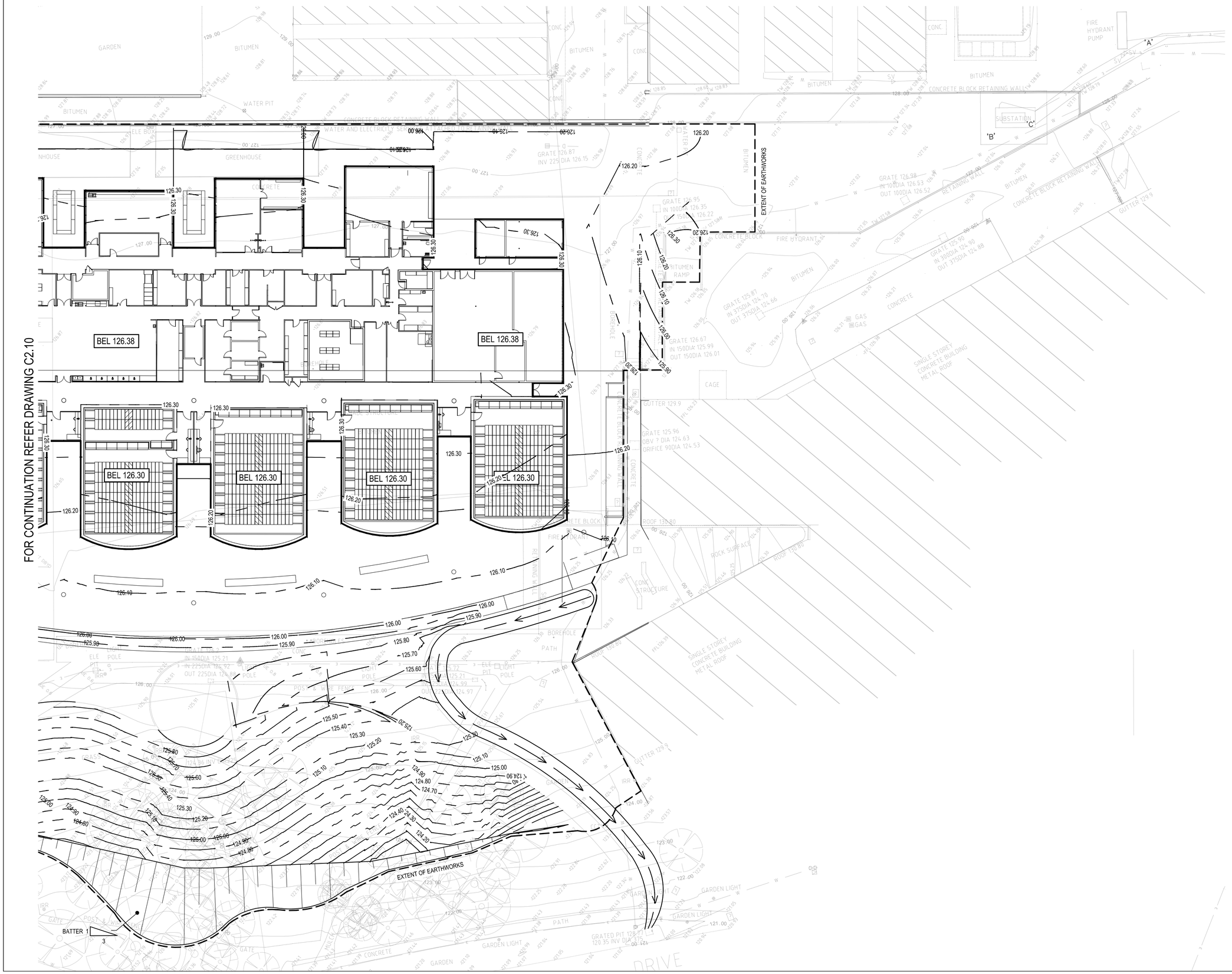

NORTH

DIAL BEFORE YOU DIG
www.1100.com.au

CUT/FILL VOLUMES
CUT - 2830.092 cu.m
FILL - 3279.406 cu.m

NET - 449.314 cu.m FILL

200mm STRIPPED TOPSOIL
ACROSS SITE - 2,590 cu.m

Rev	Revision Description	Date
F	ISSUE FOR DA	02.07.2019
E	ISSUE FOR DA	26.06.2019
D	ISSUE FOR DA	21.06.2019
C	ISSUE FOR INFORMATION	19.06.2019
B	ISSUE FOR DA	26.04.2019
A	50% DESIGN DEVELOPMENT	15.04.2019

scp engineers and development consultants
L2 Danchen House
507 Kent St Sydney NSW 2000
ABN 80 003 076 024
T (02) 9267 9312
mail@scpconsult.com.au
www.scpconsult.com.au

Client
FDC

Project
NATIONAL HERBARIUM OF NSW

Title
BULK EARTHWORKS PLAN - SHEET 2

Scale
0 5000 12500
1:250 @ A1

Drawn	Checked	Approved
LW	MP	---

Project Number	Drawing Number	Revision
180111	C2.11	F

PLOTTED BY CAD SCP Consulting, File Path: K:\180111 Mount Annan Botanical Gardens Herbarium\07. CAD\BIM\Drawings\180111. C2.10 BULK EARTHWORKS PLAN.dwg 02/26/2019 - 8:28:34 AM

LEGEND Lower		Upper		Colour
-9999	to	-3.75	Meters	
-3.75	to	-3.5	Meters	
-3.5	to	-3.25	Meters	
-3.25	to	-3	Meters	
-3	to	-2.75	Meters	
-2.75	to	-2.5	Meters	
-2.5	to	-2.25	Meters	
-2.25	to	-2	Meters	
-2	to	-1.75	Meters	
-1.75	to	-1.5	Meters	
-1.5	to	-1.25	Meters	
-1.25	to	-1	Meters	
-1	to	-.75	Meters	
-0.75	to	-.5	Meters	
-0.5	to	-.25	Meters	
-0.25	to	-.0	Meters	
.0	to	0.25	Meters	
0.25	to	.5	Meters	
.5	to	.75	Meters	
.75	to	1	Meters	
1	to	1.25	Meters	
1.25	to	1.5	Meters	
1.5	to	1.75	Meters	
1.75	to	2	Meters	
2	to	2.25	Meters	
2.25	to	2.5	Meters	
2.5	to	2.75	Meters	
2.75	to	3	Meters	
3	to	3.25	Meters	
3.25	to	3.5	Meters	
3.5	to	3.0	Meters	
3.0	to	3.25	Meters	
3.25	to	3.5	Meters	
3.5	to	3.75	Meters	
3.75	to	9999	Meters	

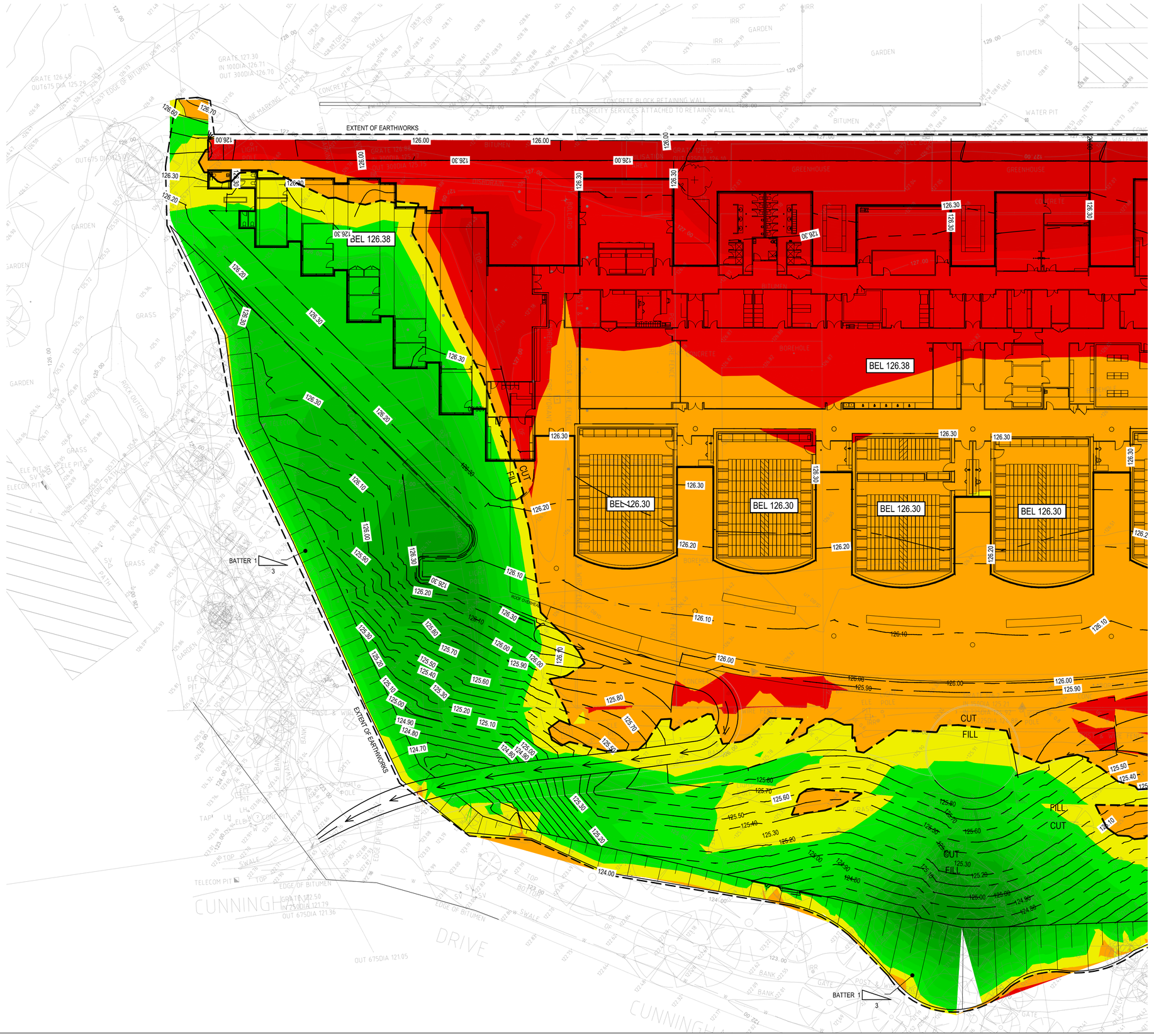

THESE DESIGNS, DRAWINGS AND SPECIFICATIONS ARE COPYRIGHT AND THE PROPERTY OF SCP CONSULTING AND MUST NOT BE USED, REPRODUCED OR COPIED WHOLLY OR IN PART WITHOUT THE WRITTEN PERMISSION OF SCP CONSULTING

NORTH

DIAL BEFORE YOU DIG
www.1100.com.au

FOR CONTINUATION REFER DRAWING C2.11

Rev	Revision Description	Date
B	ISSUE FOR DA	02.07.2019
A	ISSUE FOR DA	26.06.2019

scp engineers and development consultants
L2 Danchen House
507 Kent St Sydney NSW 2000
ABN 80 003 076 024
T (02) 9267 9312
mail@scpconsult.com.au
www.scpconsult.com.au

Client
FDC

Project
NATIONAL HERBARIUM OF NSW

Title
BULK EARTHWORKS CUT FILL PLAN HERBARIUM - SHEET 1

Scale
0 5000 12500
1:250 @ A1

Drawn	Checked	Approved
LW	MP	---

Project Number	Drawing Number	Revision
180111	C2.15	B

PLOTTED BY CAD 03/25/2019 - 8:25:17 AM SCP Consulting, Drg File: K:\180111 Mount Annan Botanical Gardens Herbarium\07. Civil\BAK\Drawings\180111. C2.15 BULK EARTHWORKS PLAN.dwg

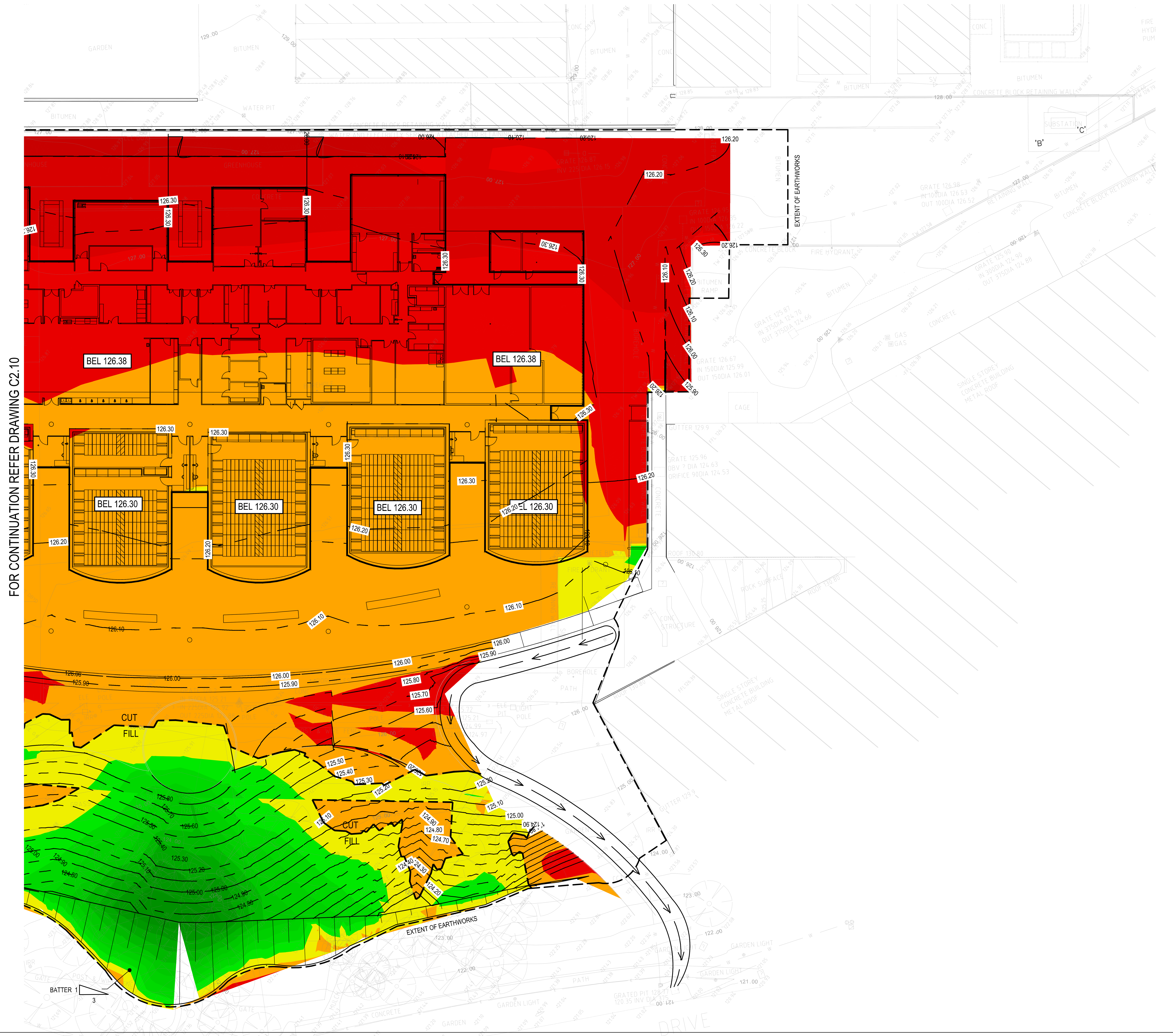

LEGEND

Lower		Upper		Colour
-9999	to	-3.75	Meters	
-3.75	to	-3.5	Meters	
-3.5	to	-3.25	Meters	
-3.25	to	-3	Meters	
-3	to	-2.75	Meters	
-2.75	to	-2.5	Meters	
-2.5	to	-2.25	Meters	
-2.25	to	-2	Meters	
-2	to	-1.75	Meters	
-1.75	to	-1.5	Meters	
-1.5	to	-1.25	Meters	
-1.25	to	-1	Meters	
-1	to	-.75	Meters	
-0.75	to	-.5	Meters	
-0.5	to	-.25	Meters	
-0.25	to	-.0	Meters	
.0	to	0.25	Meters	
0.25	to	.5	Meters	
.5	to	.75	Meters	
.75	to	1	Meters	
1	to	1.25	Meters	
1.25	to	1.5	Meters	
1.5	to	1.75	Meters	
1.75	to	2	Meters	
2	to	2.25	Meters	
2.25	to	2.5	Meters	
2.5	to	2.75	Meters	
2.75	to	3	Meters	
3	to	3.25	Meters	
3.25	to	3.5	Meters	
3.5	to	3.0	Meters	
3.0	to	3.25	Meters	
3.25	to	3.5	Meters	
3.5	to	3.75	Meters	
3.75	to	9999	Meters	

THESE DESIGNS, DRAWINGS AND SPECIFICATIONS ARE COPYRIGHT AND THE PROPERTY OF SCP CONSULTING AND MUST NOT BE USED, REPRODUCED OR COPIED WHOLLY OR IN PART WITHOUT THE WRITTEN PERMISSION OF SCP CONSULTING

NORTH

DIAL BEFORE YOU DIG www.1100.com.au

Rev	Revision Description	Date
B	ISSUE FOR DA	02.07.2019
A	ISSUE FOR DA	26.06.2019

scp engineers and development consultants
L2 Danchen House
507 Kent St Sydney NSW 2000
ABN 80 003 076 024
T (02) 9267 9312
mail@scpconsult.com.au
www.scpconsult.com.au

Client: FDC

Project: NATIONAL HERBARIUM OF NSW

Title: **BULK EARTHWORKS CUT FILL PLAN HERBARIUM - SHEET 2**

Scale: 0 — 5000 — 12500, 1:250 @ A1

Drawn	Checked	Approved
LW	MP	---

Project Number	Drawing Number	Revision
180111	C2.16	B

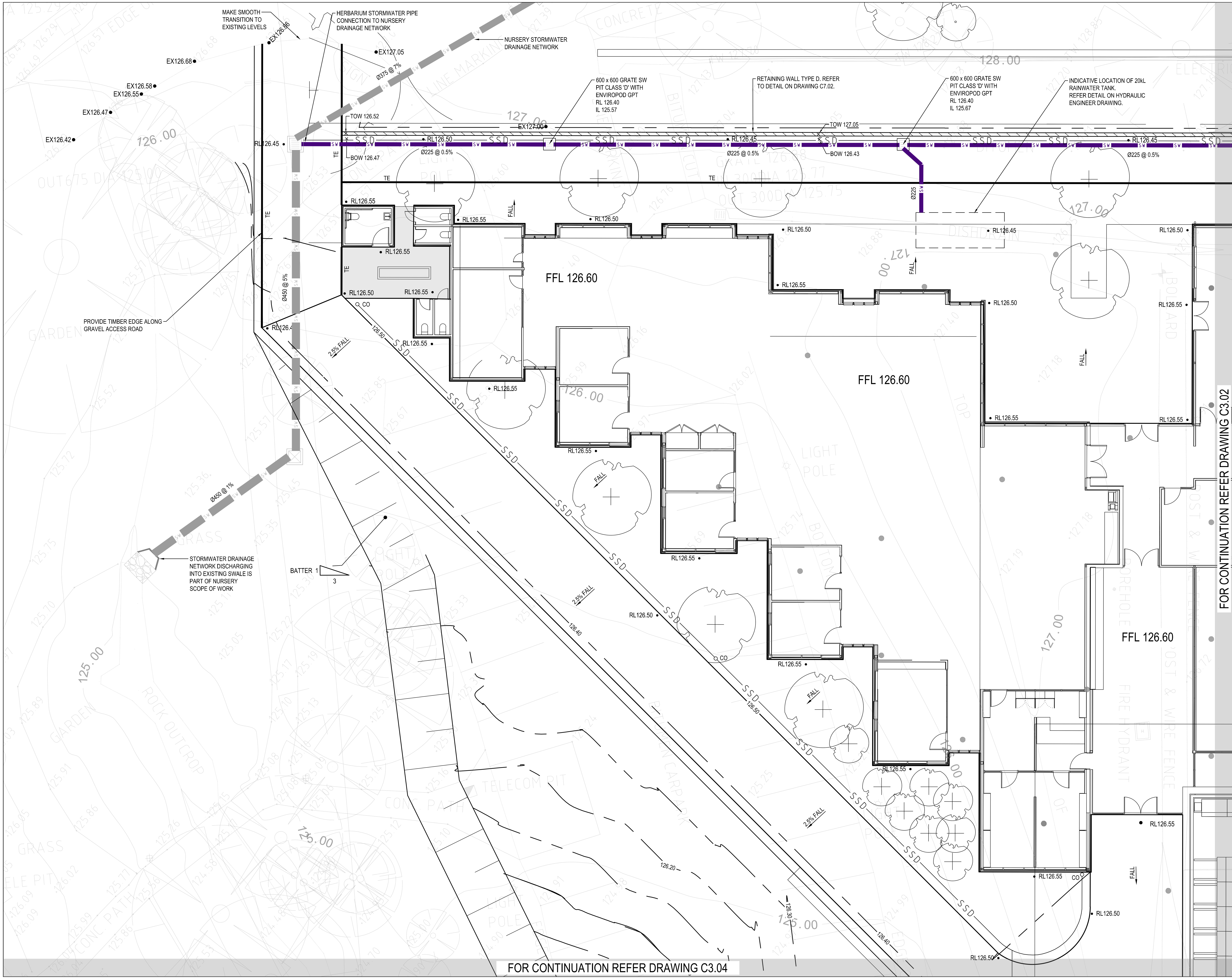

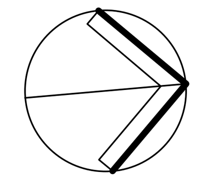

THESE DESIGNS, DRAWINGS AND SPECIFICATIONS ARE COPYRIGHT AND THE PROPERTY OF SCP CONSULTING AND MUST NOT BE USED, REPRODUCED OR COPIED WHOLLY OR IN PART WITHOUT THE WRITTEN PERMISSION OF SCP CONSULTING

DIAL BEFORE YOU DIG
www.1100.com.au

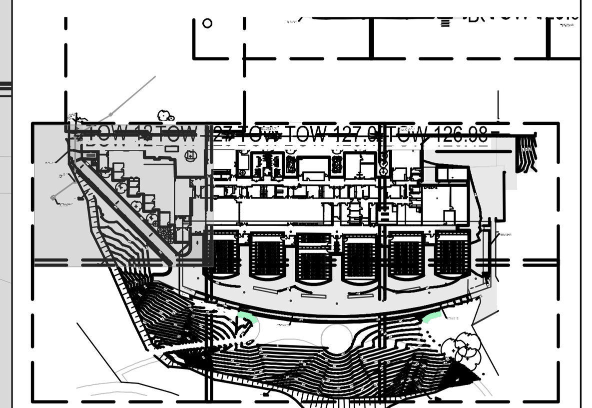

Rev	Revision Description	Date
J	ISSUE FOR DA	04.07.2019
I	ISSUE FOR DA	02.07.2019
H	ISSUE FOR DA	27.06.2019
G	ISSUE FOR DA	26.06.2019
F	ISSUE FOR DA	21.06.2019
E	ISSUE FOR INFORMATION	19.06.2019
D	ISSUE FOR INFORMATION	17.06.2019
C	ISSUE FOR INFORMATION	15.05.2019
B	ISSUE FOR DA	26.04.2019
A	50% DESIGN DEVELOPMENT	15.04.2019

scp engineers and development consultants
L2 Danchen House
507 Kent St Sydney NSW 2000
ABN 80 003 076 024
T (02) 9267 9312
mail@scpconsult.com.au
www.scpconsult.com.au

Client: FDC

Project: NATIONAL HERBARIUM OF NSW

Title: **CIVIL GRADING AND DRAINAGE PLAN HERBARIUM - SHEET 1**

Scale: 0 2000 5000 1:100 at A1

Drawn	Checked	Approved
LW	MP	---

Project Number	Drawing Number	Revision
180111	C3.01	J

THESE DESIGNS, DRAWINGS AND SPECIFICATIONS ARE COPYRIGHT AND THE PROPERTY OF SCP CONSULTING AND MUST NOT BE USED, REPRODUCED OR COPIED WHOLLY OR IN PART WITHOUT THE WRITTEN PERMISSION OF SCP CONSULTING

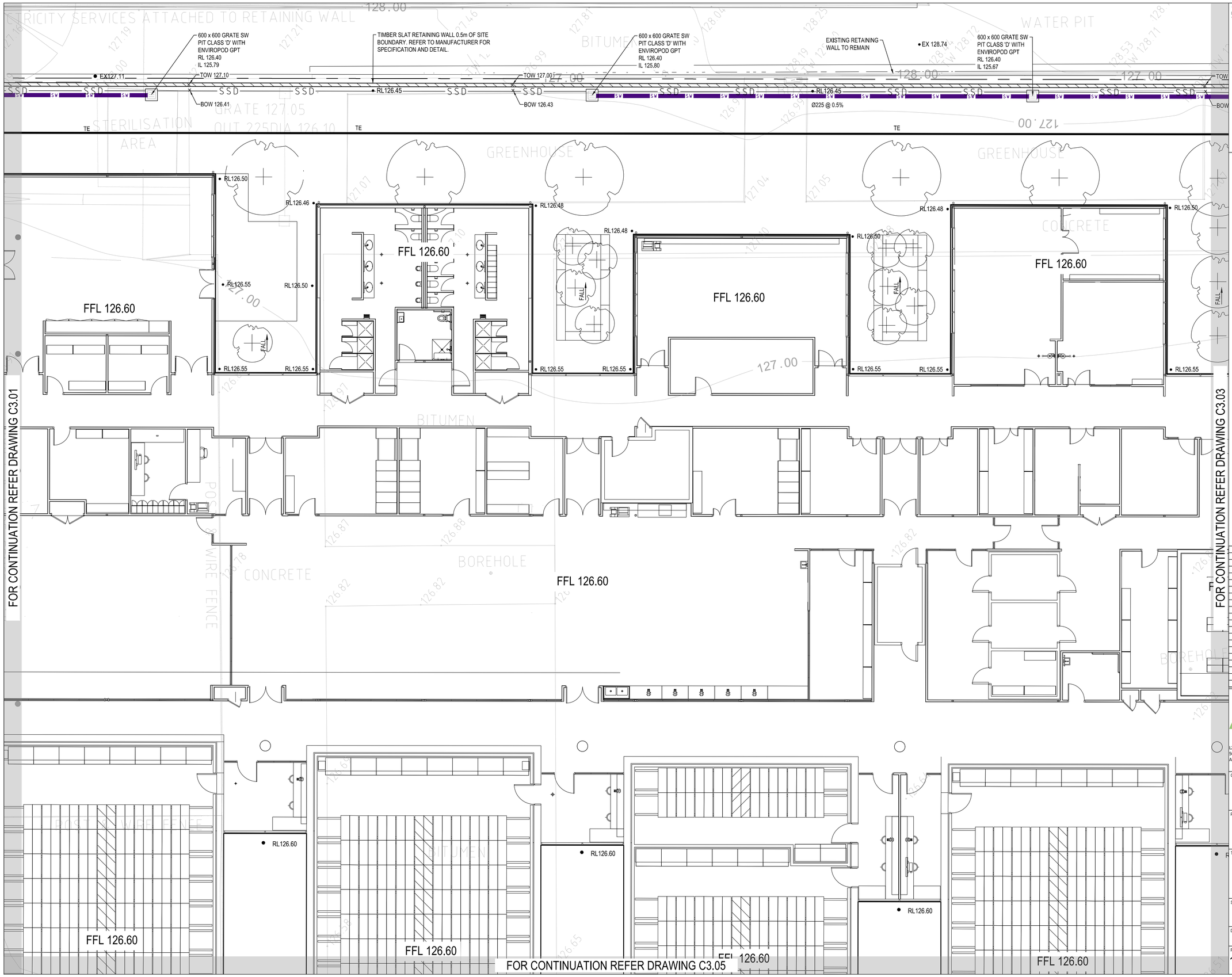

Rev	Revision Description	Date
I	ISSUE FOR DA	04.07.2019
H	ISSUE FOR DA	02.07.2019
G	ISSUE FOR DA	27.06.2019
F	ISSUE FOR DA	26.06.2019
E	ISSUE FOR DA	21.06.2019
D	ISSUE FOR INFORMATION	19.06.2019
C	ISSUE FOR INFORMATION	17.06.2019
B	ISSUE FOR DA	26.04.2019
A	50% DESIGN DEVELOPMENT	15.04.2019

scp engineers and development consultants
L2 Danchen House
507 Kent St Sydney NSW 2000
ABN 80 003 076 024
T (02) 9267 9312
mail@scpconsult.com.au
www.scpconsult.com.au

Client: FDC

Project: NATIONAL HERBARIUM OF NSW

Title: **CIVIL GRADING AND DRAINAGE PLAN HERBARIUM - SHEET 2**

Scale: 0 2000 5000 — 1:100 at A1

Drawn	Checked	Approved
LW	MP	---

Project Number	Drawing Number	Revision
180111	C3.02	I

PLOTTED BY CAD 04/07/2019 - 12:27:42 PM SCP Consulting, File Path: K:\180111 Mount Annan Botanical Gardens Herbarium\07. Civil\BIM\Drawings\180111_C3.01 CIVIL GRADING AND DRAINAGE PLANS.dwg

THESE DESIGNS, DRAWINGS AND SPECIFICATIONS ARE COPYRIGHT AND THE PROPERTY OF SCP CONSULTING AND MUST NOT BE USED, REPRODUCED OR COPIED WHOLLY OR IN PART WITHOUT THE WRITTEN PERMISSION OF SCP CONSULTING

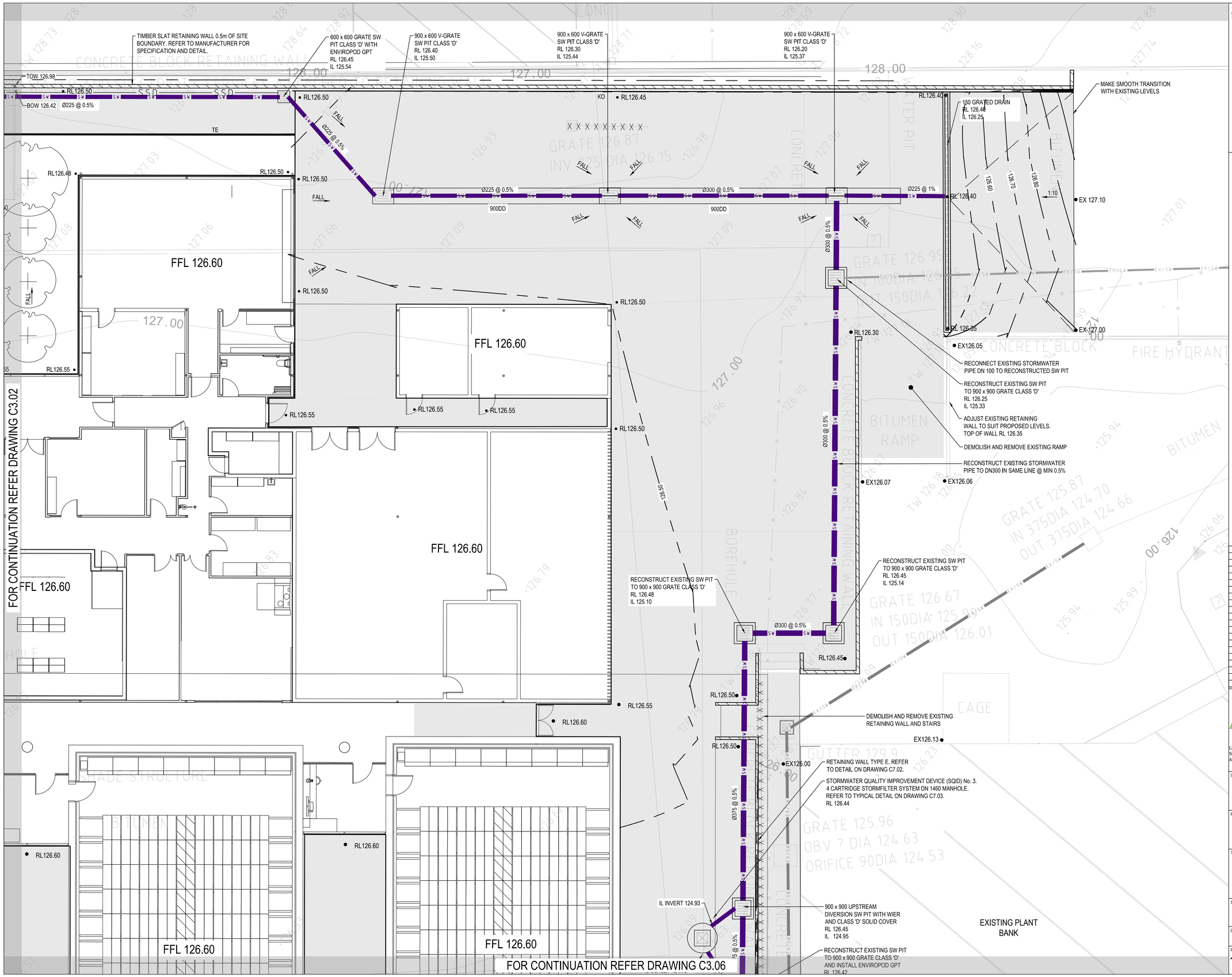

NORTH

DIAL BEFORE YOU DIG www.1100.com.au

Rev	Revision Description	Date
I	ISSUE FOR DA	04.07.2019
H	ISSUE FOR DA	02.07.2019
G	ISSUE FOR DA	27.06.2019
F	ISSUE FOR DA	26.06.2019
E	ISSUE FOR DA	21.06.2019
D	ISSUE FOR INFORMATION	19.06.2019
C	ISSUE FOR INFORMATION	17.06.2019
B	ISSUE FOR DA	26.04.2019
A	50% DESIGN DEVELOPMENT	15.04.2019

scp engineers and development consultants
L2 Danchen House
507 Kent St Sydney NSW 2000
ABN 80 003 076 024
T (02) 9267 9312
mail@scpconsult.com.au
www.scpconsult.com.au

Client: FDC

Project: NATIONAL HERBARIUM OF NSW

Title: **CIVIL GRADING AND DRAINAGE PLAN HERBARIUM - SHEET 3**

Scale: 0 2000 5000 — 1:100 at A1

Drawn	Checked	Approved
LW	MP	---

Project Number	Drawing Number	Revision
180111	C3.03	I

PLOTTED BY CAD 04/20/2019 - 1:23:21 PM SCP Consulting, Sky Path: K:\180111 Mount Annan Botanical Gardens Herbarium\07. Civil\BIM\Drawings\180111_C3.01 CIVIL GROUND AND DRAINAGE PLAN05.dwg

THESE DESIGNS, DRAWINGS AND SPECIFICATIONS ARE COPYRIGHT AND THE PROPERTY OF SCP CONSULTING AND MUST NOT BE USED, REPRODUCED OR COPIED WHOLLY OR IN PART WITHOUT THE WRITTEN PERMISSION OF SCP CONSULTING

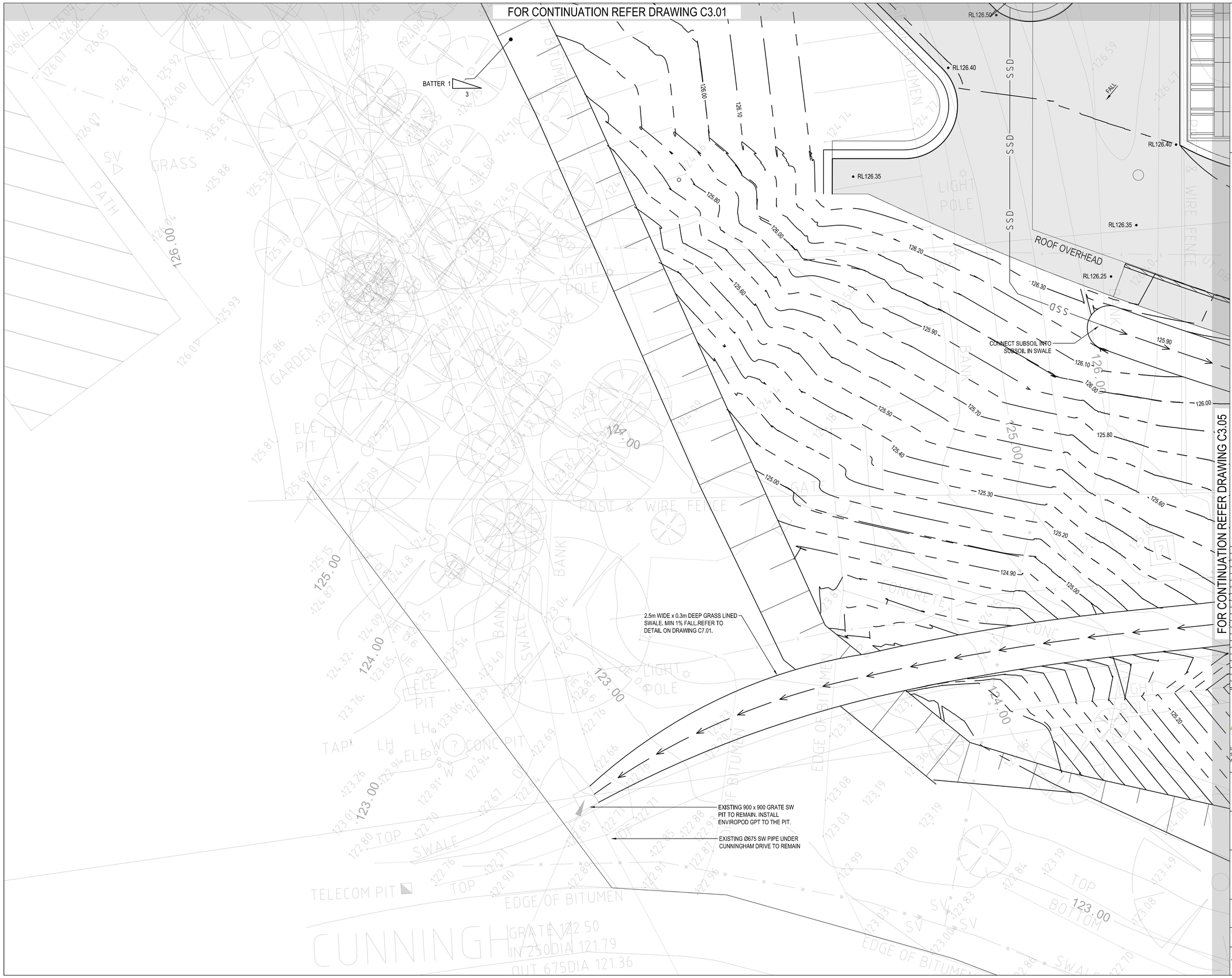

NORTH

DIAL BEFORE YOU DIG
www.1100.com.au

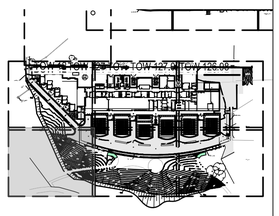

Rev	Revision Description	Date
J	ISSUE FOR DA	04.07.2019
I	ISSUE FOR DA	02.07.2019
H	ISSUE FOR DA	27.06.2019
G	ISSUE FOR DA	26.06.2019
F	ISSUE FOR DA	21.06.2019
E	ISSUE FOR INFORMATION	19.06.2019
D	ISSUE FOR INFORMATION	17.06.2019
C	ISSUE FOR INFORMATION	15.05.2019
B	ISSUE FOR DA	26.04.2019
A	50% DESIGN DEVELOPMENT	15.04.2019

scp engineers and development consultants
L2 Danchen House
507 Kent St Sydney NSW 2000
ABN 80 003 076 024
T (02) 9267 9312
mail@scpconsult.com.au
www.scpconsult.com.au

Client
FDC

Project
NATIONAL HERBARIUM OF NSW

Title
CIVIL GRADING AND DRAINAGE PLAN HERBARIUM - SHEET 4

Scale
0 2000 5000
1:100 at A1

Drawn	Checked	Approved
LW	MP	---

Project Number	Drawing Number	Revision
180111	C3.04	J

PLOTTED BY CAD 04/03/2019 - 12:33:11 PM SCP Consulting, File Path: K:\180111 Mount Annan Botanical Gardens Herbarium\07 Civil\BIM\Drawings\180111_C3.01 CIVIL GRADING AND DRAINAGE PLAN.dwg

THESE DESIGNS, DRAWINGS AND SPECIFICATIONS ARE COPYRIGHT AND THE PROPERTY OF SCP CONSULTING AND MUST NOT BE USED, REPRODUCED OR COPIED WHOLLY OR IN PART WITHOUT THE WRITTEN PERMISSION OF SCP CONSULTING

NORTH

DIAL BEFORE YOU DIG
www.1100.com.au

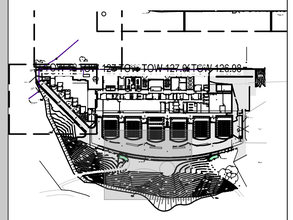

Rev	Revision Description	Date
J	ISSUE FOR DA	10.07.2019
I	ISSUE FOR DA	04.07.2019
H	ISSUE FOR DA	02.07.2019
G	ISSUE FOR DA	27.06.2019
F	ISSUE FOR DA	26.06.2019
E	ISSUE FOR DA	21.06.2019
D	ISSUE FOR INFORMATION	19.06.2019
C	ISSUE FOR INFORMATION	17.06.2019
B	ISSUE FOR DA	26.04.2019
A	50% DESIGN DEVELOPMENT	15.04.2019

scp engineers and development consultants
L2 Danchen House
507 Kent St Sydney NSW 2000
ABN 80 003 076 024
T (02) 9267 9312
mail@scpconsult.com.au
www.scpconsult.com.au

Client
FDC

Project
NATIONAL HERBARIUM OF NSW

Title
CIVIL GRADING AND DRAINAGE PLAN
HERBARIUM - SHEET 5

Scale
0 2000 5000
1:100 at A1

Drawn	Checked	Approved
LW	MP	---

Project Number	Drawing Number	Revision
180111	C3.05	J

PLOTTED BY CAD 10/18/2019 - 11:18:51 AM SCP Consulting, File Path: K:\180111 Mount Annan Botanical Gardens Herbarium\07. Civil\BIM\Drawings\180111_C3.01 CIVIL GRADING AND DRAINAGE PLANS.dwg

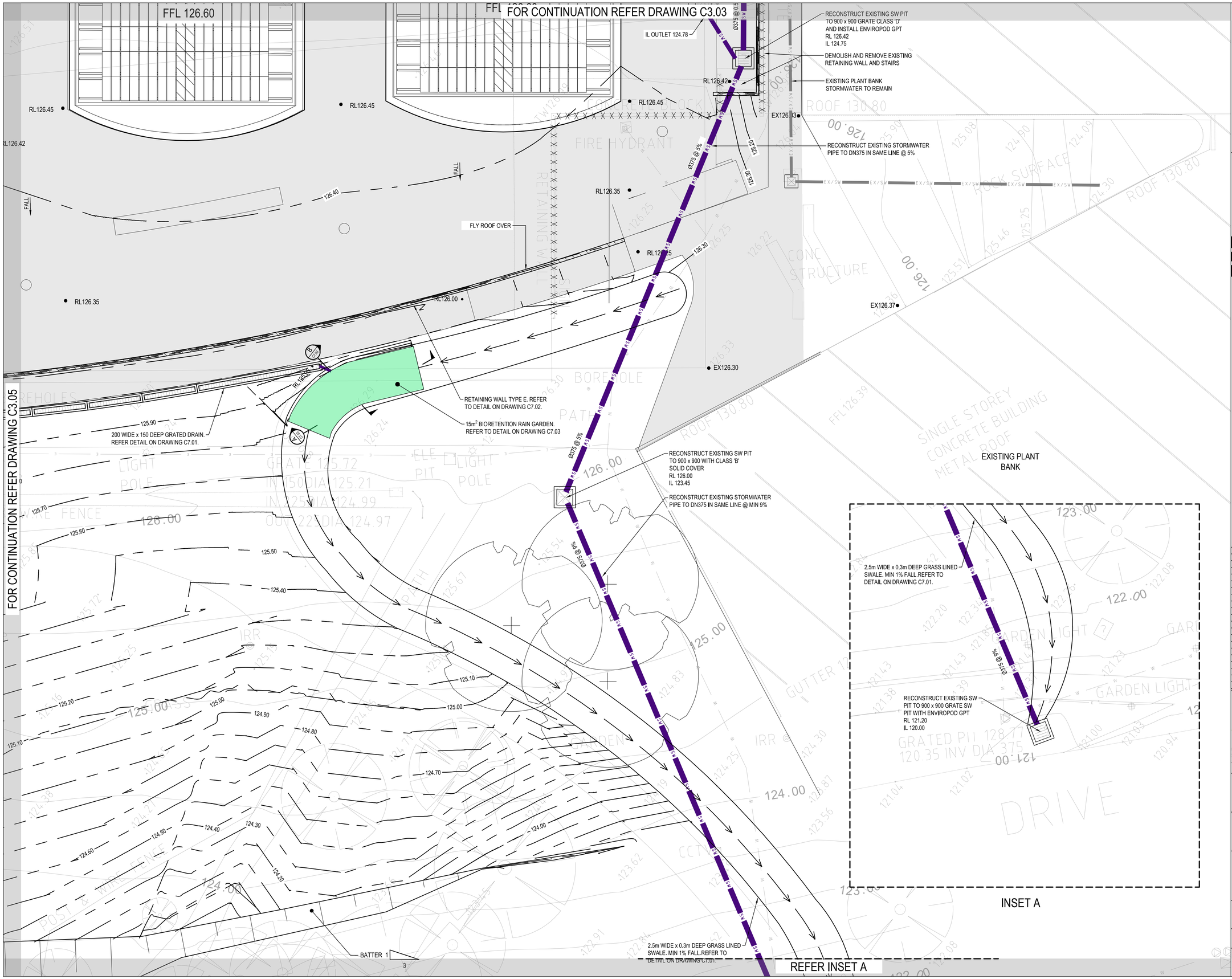

THESE DESIGNS, DRAWINGS AND SPECIFICATIONS ARE COPYRIGHT AND THE PROPERTY OF SCP CONSULTING AND MUST NOT BE USED, REPRODUCED OR COPIED WHOLLY OR IN PART WITHOUT THE WRITTEN PERMISSION OF SCP CONSULTING

DIAL BEFORE YOU DIG
www.1100.com.au

Rev	Revision Description	Date
J	ISSUE FOR DA	10.07.2019
I	ISSUE FOR DA	04.07.2019
H	ISSUE FOR DA	02.07.2019
G	ISSUE FOR DA	27.06.2019
F	ISSUE FOR DA	26.06.2019
E	ISSUE FOR DA	21.06.2019
D	ISSUE FOR INFORMATION	19.06.2019
C	ISSUE FOR INFORMATION	17.06.2019
B	ISSUE FOR DA	26.04.2019
A	50% DESIGN DEVELOPMENT	15.04.2019

scp engineers and development consultants
L2 Danchen House
507 Kent St Sydney NSW 2000
ABN 80 003 076 024
T (02) 9267 9312
mail@scpconsult.com.au
www.scpconsult.com.au

Client: FDC

Project: NATIONAL HERBARIUM OF NSW

Title: **CIVIL GRADING AND DRAINAGE PLAN HERBARIUM - SHEET 6**

Scale: 0 2000 5000 — 1:100 at A1

Drawn	Checked	Approved
LW	MP	---

Project Number	Drawing Number	Revision
180111	C3.06	J

PLOTTED BY CAD 10/7/2019 - 11:17:23 AM SCP Consulting, File Path: K:\180111 Mount Annan Botanical Gardens Herbarium\07. Civil\BIM\Drawings\180111_C3.01 CIVIL GRADING AND DRAINAGE PLANS.dwg

THESE DESIGNS, DRAWINGS AND SPECIFICATIONS ARE COPYRIGHT AND THE PROPERTY OF SCP CONSULTING AND MUST NOT BE USED, REPRODUCED OR COPIED WHOLLY OR IN PART WITHOUT THE WRITTEN PERMISSION OF SCP CONSULTING

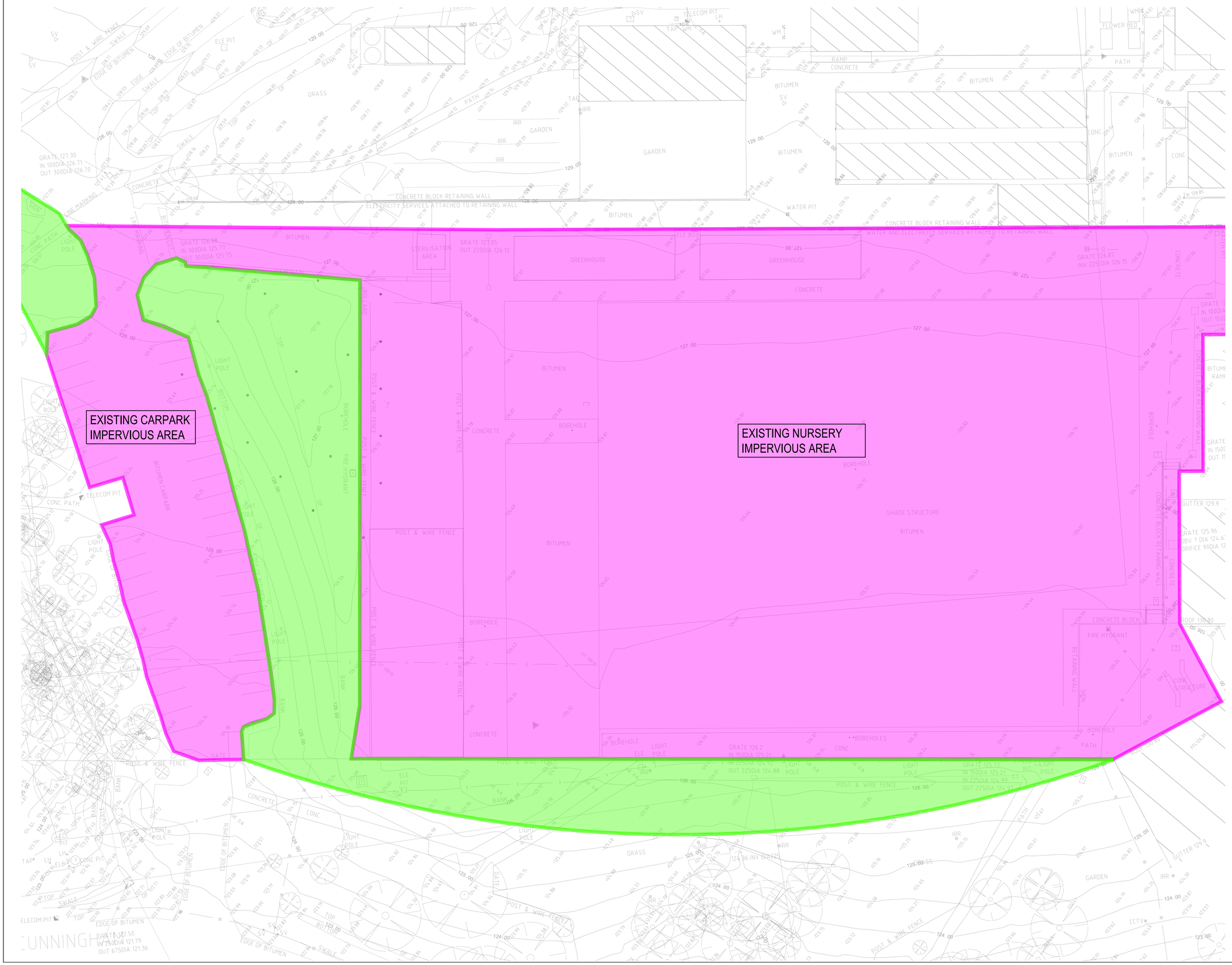

NORTH

DIAL BEFORE YOU DIG
www.1100.com.au

TOTAL SITE AREA - 12,060m^2

TOTAL EXISTING IMPERVIOUS AREA - 9,900m^2

TOTAL IMPERVIOUS PERCENTAGE - 82%

Rev	Revision Description	Date
B	ISSUE FOR DA	09.07.2019
A	ISSUE FOR DA	26.04.2019

scp engineers and development consultants
L2 Danchen House
507 Kent St Sydney NSW 2000
ABN 80 003 076 024
T (02) 9267 9312
mail@scpconsult.com.au
www.scpconsult.com.au

Client: FDC

Project: NATIONAL HERBARIUM OF NSW

Title: **EXISTING CATCHMENT PLAN - HERBARIUM**

Scale: 0 5000 12500 — 1:250 @ A1

Drawn	Checked	Approved
LW	MP	---

Project Number	Drawing Number	Revision
180111	C3.20	B

PLOTTED BY CAD 09/07/2019 - 4:47:59 PM SCP Consulting, File Path: K:\180111 Mount Annan Botanical Gardens Herbarium\07. Civil\BIM\Drawings\180111_C3.20 CATCHMENT PLANS.dwg

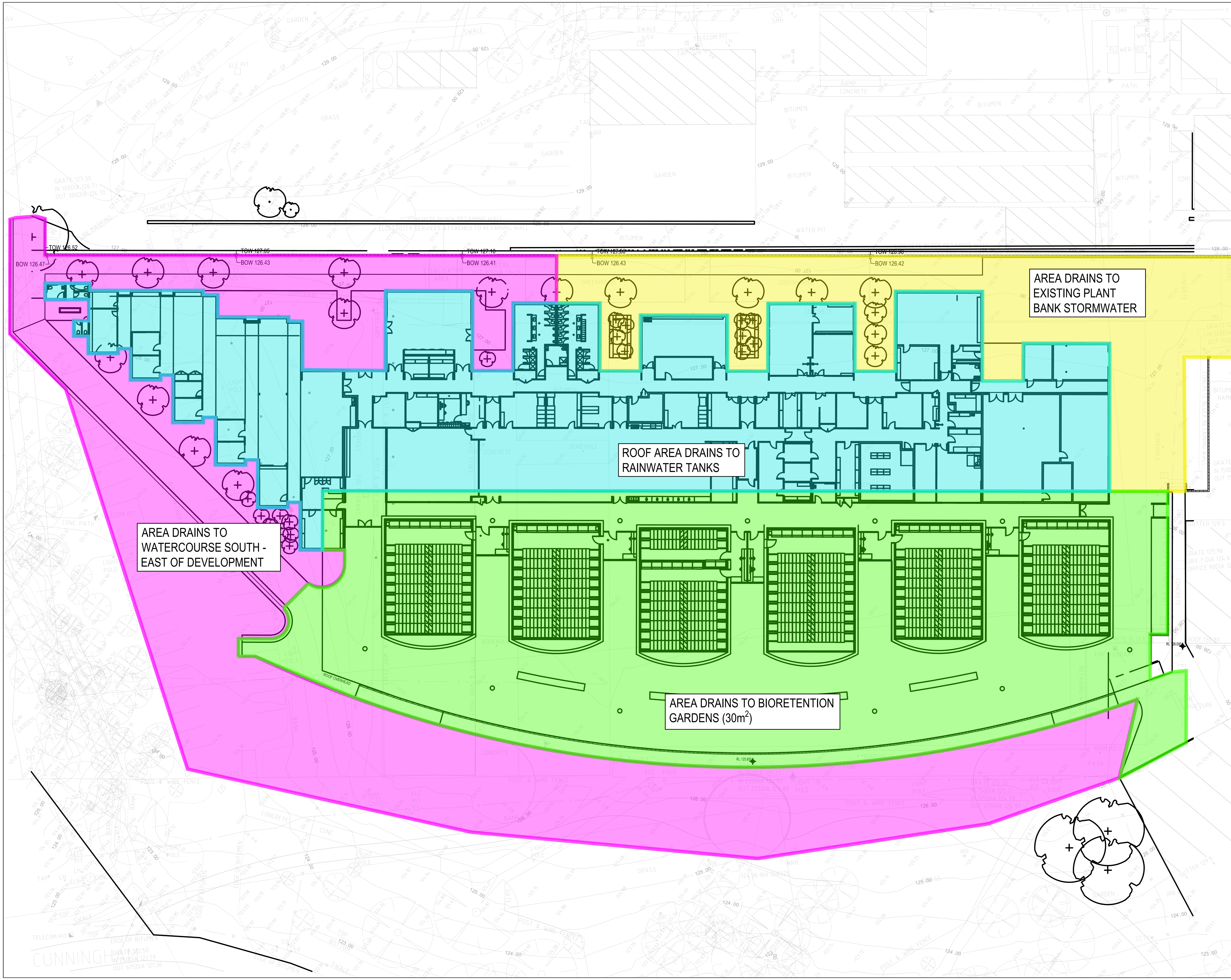

THESE DESIGNS, DRAWINGS AND SPECIFICATIONS ARE COPYRIGHT AND THE PROPERTY OF SCP CONSULTING AND MUST NOT BE USED, REPRODUCED OR COPIED WHOLLY OR IN PART WITHOUT THE WRITTEN PERMISSION OF SCP CONSULTING

NORTH

DIAL BEFORE YOU DIG
www.1100.com.au

TOTAL SITE AREA - 12,290m^2

TOTAL CATCHMENT DRAINING TO BIORETENTION - 4,340m^2

TOTAL CATCHMENT DRAINING TO RAINWATER TANK - 3,160m^2

TOTAL PERVIOUS AREA BYPASSING BIORETENTION & RAINWATER TANK - 3,510m^2

TOTAL IMPERVIOUS AREA BYPASSING BIORETENTION & RAINWATER TANK - 1,280m^2

TOTAL IMPERVIOUS PERCENTAGE - 72%

Rev	Revision Description	Date
D	ISSUE FOR DA	02.07.2019
C	ISSUE FOR DA	26.06.2019
B	ISSUE FOR DA	21.06.2019
A	ISSUE FOR DA	26.04.2019

scp engineers and development consultants
L2 Danchen House
507 Kent St Sydney NSW 2000
ABN 80 003 076 024
T (02) 9267 9312
mail@scpconsult.com.au
www.scpconsult.com.au

Client: FDC

Project: NATIONAL HERBARIUM OF NSW

Title: **PROPOSED CATCHMENT PLAN - HERBARIUM**

Scale: 0 5000 12500
1:250 @ A1

Drawn	Checked	Approved
LW	MP	---

Project Number	Drawing Number	Revision
180111	C3.21	D

THESE DESIGNS, DRAWINGS AND SPECIFICATIONS ARE COPYRIGHT AND THE PROPERTY OF SCP CONSULTING AND MUST NOT BE USED, REPRODUCED OR COPIED WHOLLY OR IN PART WITHOUT THE WRITTEN PERMISSION OF SCP CONSULTING

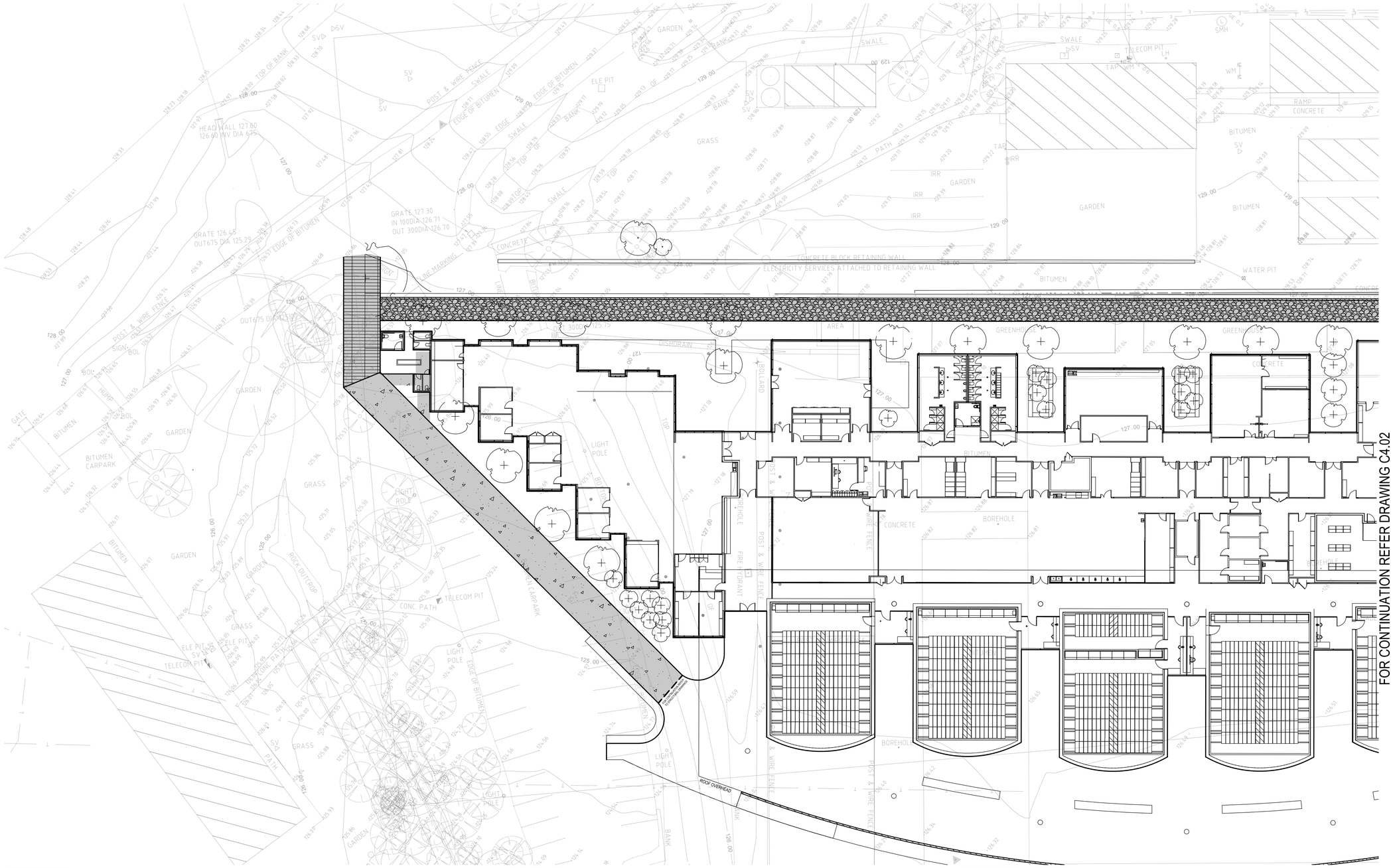

PAVEMENT TYPE 1
CONCRETE PAVEMENT

DESIGN FINISHED SURFACE LEVEL

- 130mm THICK 32MPa CONCRETE WITH SL82 MESH TOP (50 COVER)
- 100mm COMPACTED THICKNESS BASECOURSE (DGB20)
- COMPACTED SUBGRADE (CBR 3% MIN)

PAVEMENT TYPE 2
ECORASTER E50 WITH GRAVEL FILL

DESIGN FINISHED SURFACE LEVEL

- ECORASTER E50 AND GRAVEL FILL
- 50mm COMPACTED THICKNESS BASECOURSE
- 200mm COMPACTED DRAINAGE LAYER
- 250mm COMPACTED THICKNESS SUBBASE
- POLLUTANT BARRIER GEOTEXTILE
- COMPACTED SUBGRADE (CBR 3% MIN)

NOTE: INSTALL IN ACCORDANCE WITH MANUFACTURER SPECIFICATION AND DETAILS

PAVEMENT TYPE 3
CONCRETE PAVEMENT

DESIGN FINISHED SURFACE LEVEL

- 150mm THICK NATURAL GRAVEL WITH AGGREGATE SIZE MAX 50mm (REFER TO LANDSCAPE ARCHITECT DRAWING FOR DETAIL)
- COMPACTED SUBGRADE (CBR 3% MIN)

NORTH

DIAL BEFORE YOU DIG
www.1100.com.au

Rev	Revision Description	Date
F	ISSUE FOR DA	04.07.2019
E	ISSUE FOR DA	02.07.2019
D	ISSUE FOR DA	26.06.2019
C	ISSUE FOR DA	21.06.2019
B	ISSUE FOR DA	26.04.2019
A	50% DESIGN DEVELOPMENT	15.04.2019

scp engineers and development consultants
L2 Danchen House
507 Kent St Sydney NSW 2000
ABN 80 003 076 024
T (02) 9267 9312
mail@scpconsult.com.au
www.scpconsult.com.au

Client: FDC

Project: NATIONAL HERBARIUM OF NSW

Title: **PAVEMENT PLAN HERBARIUM - SHEET 1**

Scale: 0 5000 12500 — 1:250 @ A1

Drawn	Checked	Approved
LW	MP	---

Project Number	Drawing Number	Revision
180111	C4.01	F

PLOTTED BY CAD 04/08/2019 - 12:38:39 PM SCP Consulting, File Path: K:\180111 Mount Annan Botanical Gardens Herbarium\07. CAD\BIM\Drawings\180111_C4.01 PAVEMENT PLAN.dwg

THESE DESIGNS, DRAWINGS AND SPECIFICATIONS ARE COPYRIGHT AND THE PROPERTY OF SCP CONSULTING AND MUST NOT BE USED, REPRODUCED OR COPIED WHOLLY OR IN PART WITHOUT THE WRITTEN PERMISSION OF SCP CONSULTING

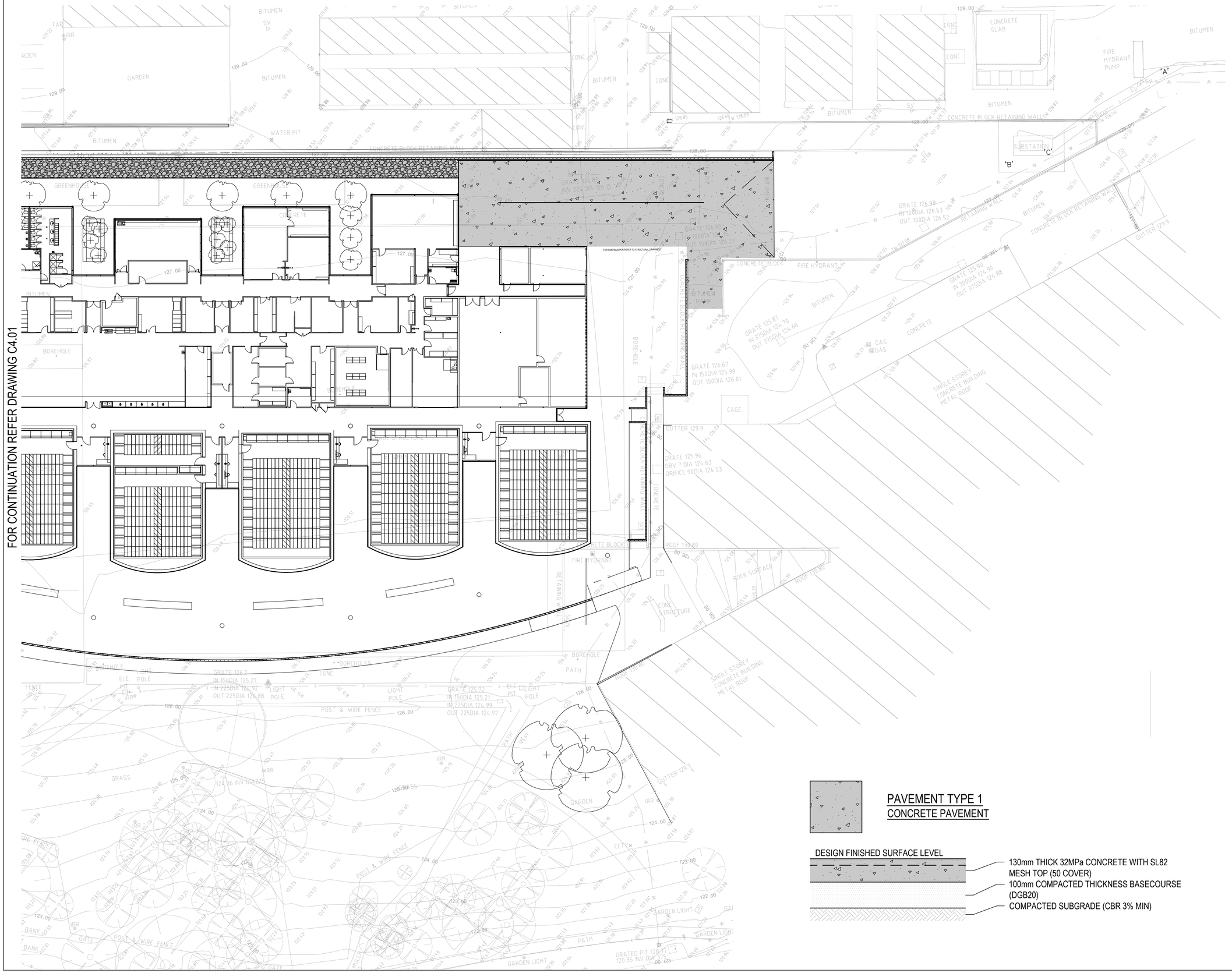

PAVEMENT TYPE 1
CONCRETE PAVEMENT

NORTH

DIAL BEFORE YOU DIG
www.1100.com.au

Rev	Revision Description	Date
G	ISSUE FOR DA	04.07.2019
F	ISSUE FOR DA	02.07.2019
E	ISSUE FOR DA	27.06.2019
D	ISSUE FOR DA	26.06.2019
C	ISSUE FOR DA	21.06.2019
B	ISSUE FOR DA	26.04.2019
A	50% DESIGN DEVELOPMENT	15.04.2019

scp engineers and development consultants
L2 Danchen House
507 Kent St Sydney NSW 2000
ABN 80 003 076 024
T (02) 9267 9312
mail@scpconsult.com.au
www.scpconsult.com.au

Client: FDC

Project: NATIONAL HERBARIUM OF NSW

Title: **PAVEMENT PLAN HERBARIUM - SHEET 2**

Scale: 0 5000 12500
1:250 @ A1

Drawn	Checked	Approved
LW	MP	---

Project Number	Drawing Number	Revision
180111	C4.02	G

PLOTTED BY CAD 04/07/2019 - 12:27:17 PM SCP Consulting File Path: K:\180111 Mount Annan Botanical Gardens Herbarium\07 CAD\BIM\Drawings\180111_C4.01 PAVEMENT PLAN.dwg

THESE DESIGNS, DRAWINGS AND SPECIFICATIONS ARE COPYRIGHT AND THE PROPERTY OF SCP CONSULTING AND MUST NOT BE USED, REPRODUCED OR COPIED WHOLLY OR IN PART WITHOUT THE WRITTEN PERMISSION OF SCP CONSULTING

EROSION AND SEDIMENT CONTROL LEGEND

- SEDIMENT FENCE
- SANDBAG SEDIMENT TRAP
- TEMPORARY CONSTRUCTION ENTRY/WASHDOWN
- SEDIMENT FILTER
- TEMPORARY SEDIMENT BASIN
- DB — DIVERSION BANK

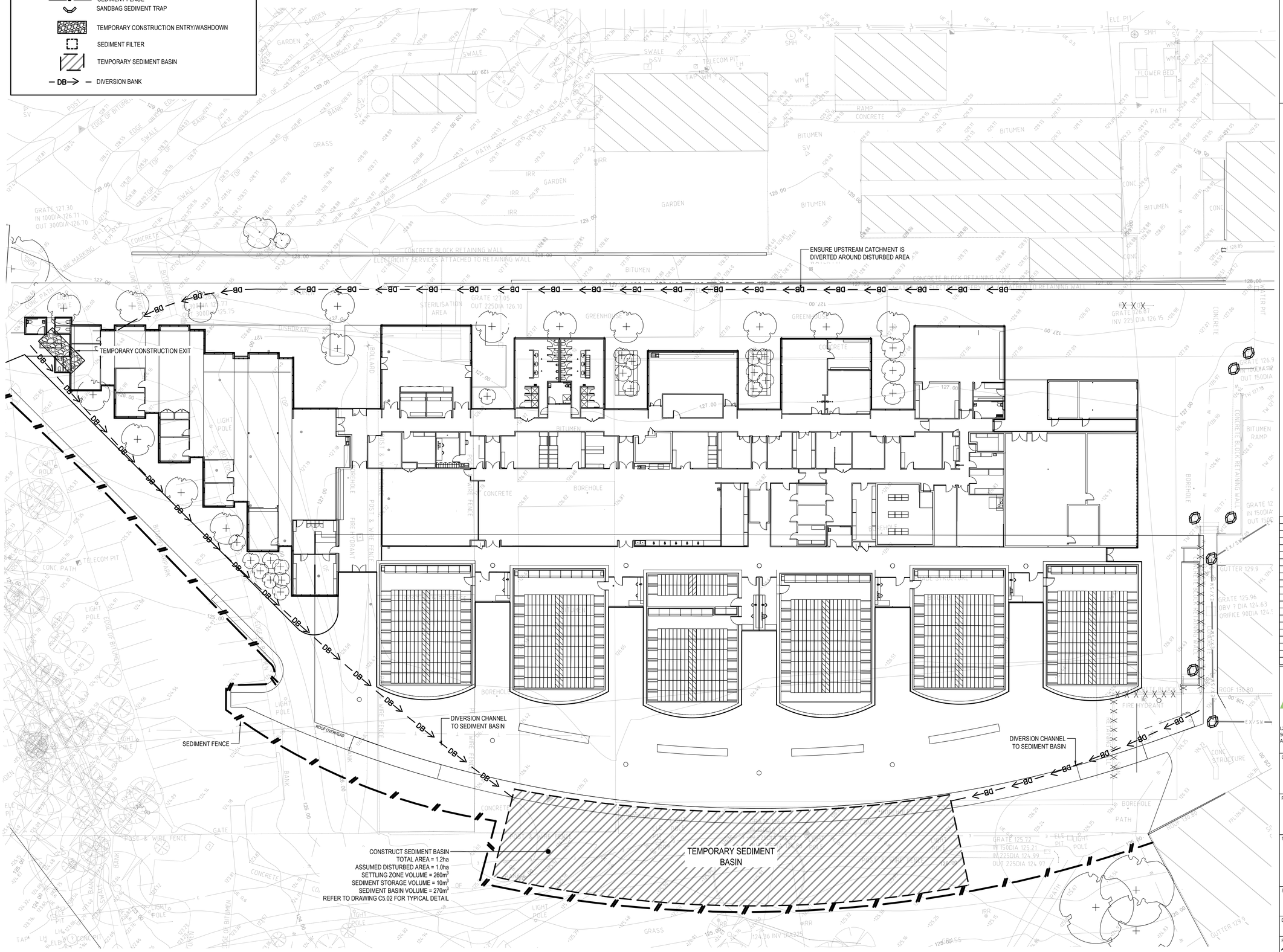

NORTH

DIAL BEFORE YOU DIG www.1100.com.au

Rev	Revision Description	Date
E	ISSUE FOR DA	02.07.2019
D	ISSUE FOR DA	26.06.2019
C	ISSUE FOR DA	21.06.2019
B	ISSUE FOR DA	26.04.2019
A	50% DESIGN DEVELOPMENT	15.04.2019

scp engineers and development consultants
L2 Danchen House
507 Kent St Sydney NSW 2000
ABN 80 003 076 024
T (02) 9267 9312
mail@scpconsult.com.au
www.scpconsult.com.au

Client: FDC

Project: NATIONAL HERBARIUM OF NSW

Title: **SOIL SEDIMENT AND EROSION PLAN - HERBARIUM**

Scale: 0 5000 12500 — 1:250 @ A1

Drawn	Checked	Approved
LW	MP	---

Project Number	Drawing Number	Revision
180111	C5.01	E

PLOTTED BY CAD 03/07/2019 8:45:15 AM SCP Consulting, File Path: K:\180111 Mount Annan Botanical Gardens Herbarium\07 CAD\BIM\Drawings\180111_C5.01 SOIL SEDIMENT AND EROSION PLAN.dwg

NOTE:
1. CONTRACTOR SHALL CONDUCT A DIAL BEFORE YOU DIG SEARCH PRIOR TO COMMENCEMENT OF ANY WORK
2. ENSURE THAT ALL COUNCIL AND PUBLIC UTILITY ASSETS ARE MAINTAINED AND PROTECTED AT ALL TIMES IN THE VICINITY OF THE TEMPORARY CONSTRUCTION EXIT

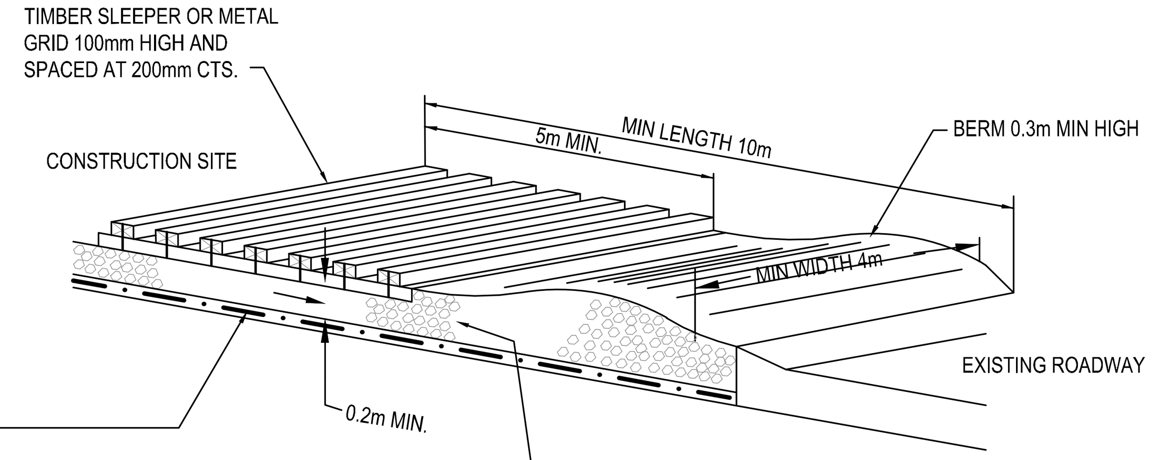

CONSTRUCTION NOTES
1. STRIP TOPSOIL AND LEVEL SITE.
2. COMPACT SUBGRADE.
3. COVER AREA WITH NEEDLE-PUNCHED GEOTEXTILE.
4. CONSTRUCT 200MM THICK PAD OVER GEOTEXTILE USING ROADBASE OR 30MM AGGREGATE.
5. CONSTRUCT HUMP IMMEDIATELY WITHIN BOUNDARY TO DIVERT WATER TO A SEDIMENT FENCE OR OTHER SEDIMENT TRAP WHERE THE SEDIMENT IS COLLECTED AND REMOVED.

MAINTENANCE NOTES
THE EXIT SHALL BE MAINTAINED IN A CONDITION WHICH PREVENTS TRACKING OR FLOWING OF SEDIMENT OFF THE CONSTRUCTION SITE. THIS MAY REQUIRE PERIODIC TOP DRESSING WITH ADDITIONAL GRAVEL AS CONDITIONS DEMAND AND REPAIR AND/OR CLEANOUT OF ANY MEASURES USED TO TRAP SEDIMENT. ALL SEDIMENT SPILLED, DROPPED, WASHED OR TRACKED OFF THE CONSTRUCTION SITE MUST BE REMOVED IMMEDIATELY.

TEMPORARY STABILISED CONSTRUCTION EXIT

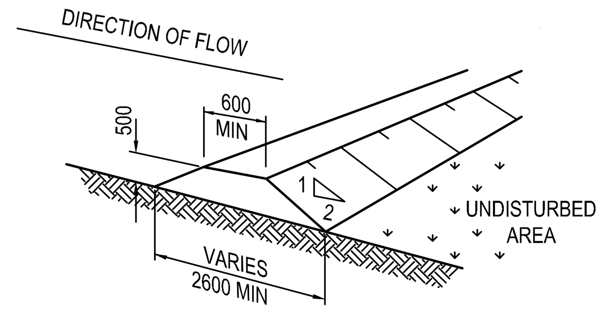

DIVERSION BANK

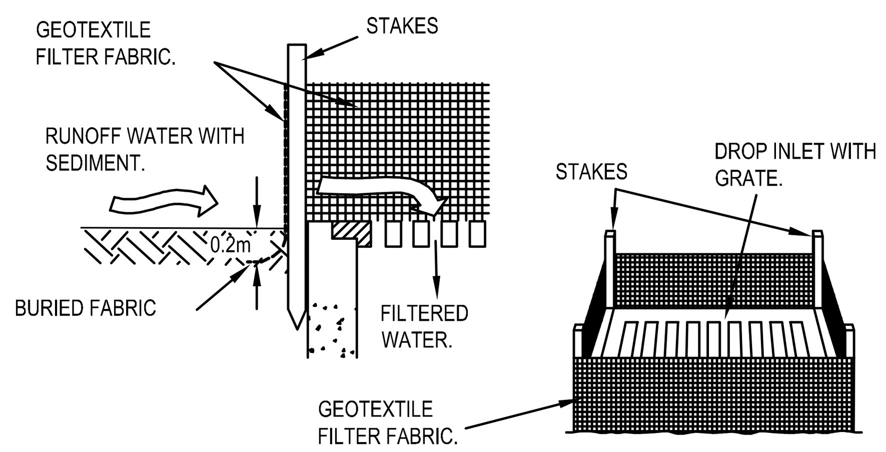

GEOTEXTILE FILTER FABRIC DROP INLET SEDIMENT TRAP.

NTS

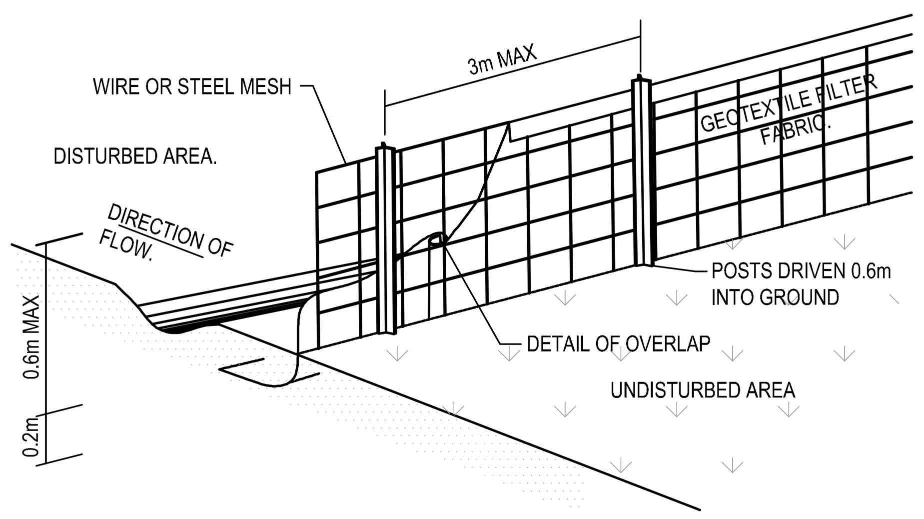

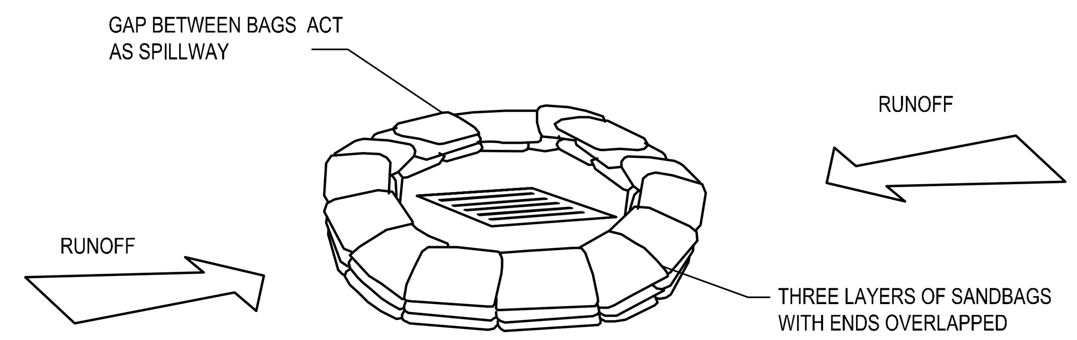

SANDBAG SEDIMENT TRAP - AT OTHER THAN KERB SAG PIT

SANDBAG SEDIMENT TRAP DETAILS

NTS

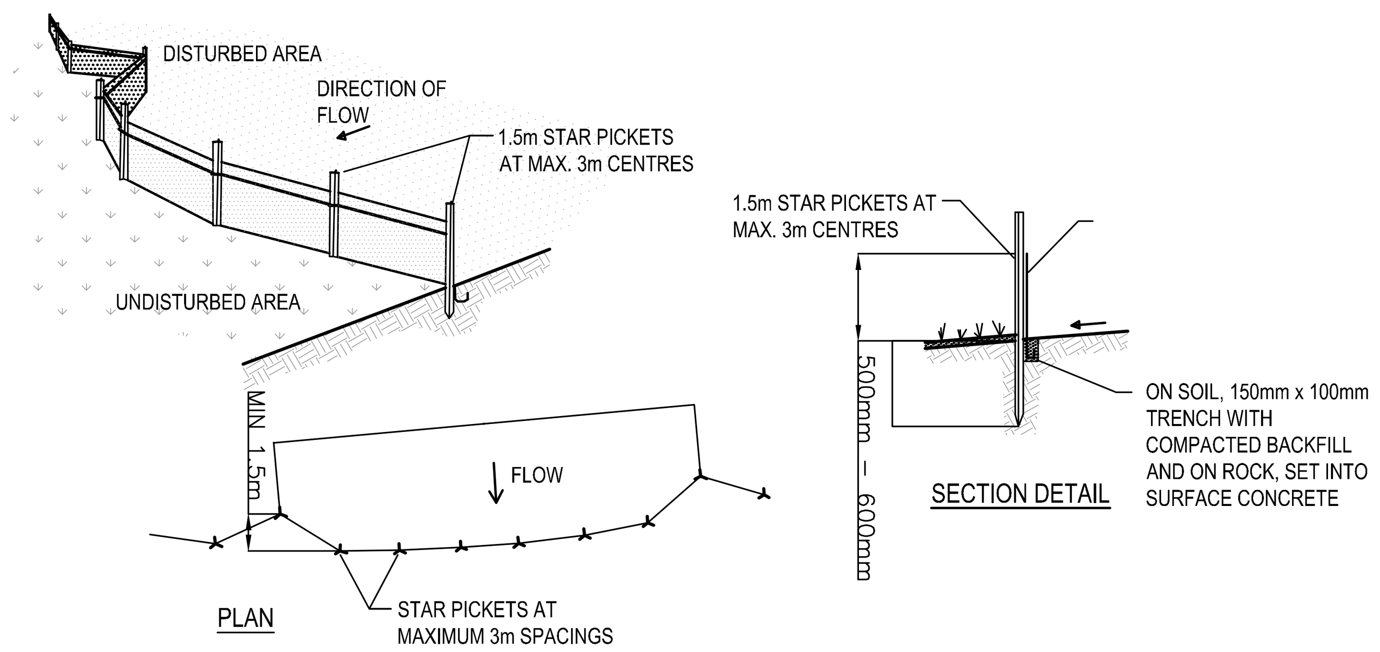

CONSTRUCTION NOTES
1. CONSTRUCT SEDIMENT FENCE AS CLOSE AS POSSIBLE TO PARALLEL TO THE CONTOURS OF THE SITE.
2. DRIVE 1.5m LONG STAR PICKETS INTO GROUND, 3 METRES APART.
3. DIG A 150mm DEEP TRENCH ALONG THE UPSLOPE LINE OF THE FENCE FOR THE BOTTOM OF THE FABRIC TO BE ENTRENCHED.
4. BACKFILL TRENCH OVER BASE OF FABRIC.
5. FIX SELF-SUPPORTING GEOTEXTILE TO UPSLOPE SIDE OF POSTS WITH WIRE TIES OR AS RECOMMENDED BY GEOTEXTILE MANUFACTURER.
6. JOIN SECTIONS OF FABRIC AT A SUPPORT POST WITH A 150mm OVERLAP.

SEDIMENT CONTROL FENCE

NTS

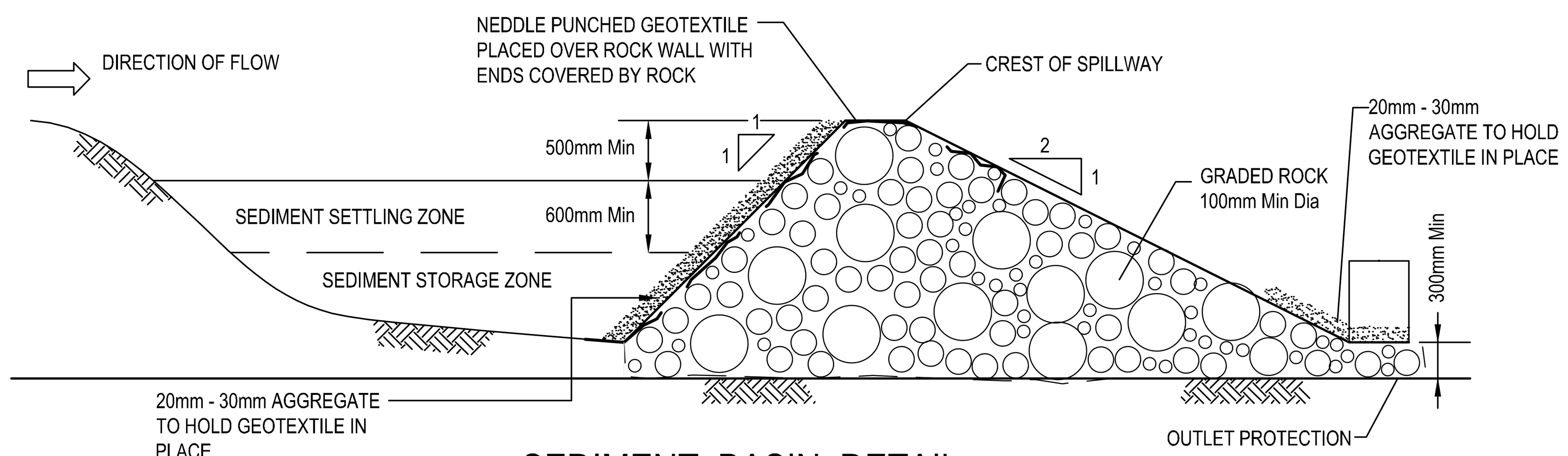

SEDIMENT BASIN DETAIL

NTS

EROSION AND SEDIMENT CONTROL NOTES

GENERAL INSTRUCTIONS

E1. THIS PLAN IS TO BE READ IN CONJUNCTION WITH THE ENGINEERING PLANS, AND ANY OTHER PLANS OR WRITTEN INSTRUCTIONS THAT MAY BE ISSUED AND RELATING TO DEVELOPMENT AT THE SUBJECT SITE.

E2. THE SITE SUPERINTENDENT WILL ENSURE THAT ALL SOIL AND WATER MANAGEMENT WORKS ARE LOCATED AS INSTRUCTED IN THIS SPECIFICATION.

E3. ALL BUILDERS AND SUB-CONTRACTORS WILL BE INFORMED OF THEIR RESPONSIBILITIES IN MINIMISING THE POTENTIAL FOR SOIL EROSION AND POLLUTION TO DOWNSLOPE LANDS AND WATERWAYS.

CONSTRUCTION SEQUENCE

E4. THE SOIL EROSION POTENTIAL ON THIS SITE SHALL BE MINIMISED. HENCE WORKS SHALL BE UNDERTAKEN IN THE FOLLOWING SEQUENCE :

a. INSTALL SEDIMENT FENCES, TEMPORARY CONSTRUCTION EXIT AND SANDBAG KERB INLET SEDIMENT TRAP.
b. UNDERTAKE SITE DEVELOPMENT WORKS IN ACCORDANCE WITH THE ENGINEERING PLANS. PHASE DEVELOPMENT SO THAT LAND DISTURBANCE IS CONFINED TO AREAS OF WORKABLE SIZE.

EROSION CONTROL

E5. DURING WINDY CONDITIONS, LARGE, UNPROTECTED AREAS WILL BE KEPT MOIST (NOT WET) BY SPRINKLING WITH WATER TO KEEP DUST UNDER CONTROL.

E6. FINAL SITE LANDSCAPING WILL BE UNDERTAKEN AS SOON AS POSSIBLE AND WITHIN 20 WORKING DAYS FROM COMPLETION OF CONSTRUCTION ACTIVITIES.

FENCING

E7. STOCKPILES WILL NOT BE LOCATED WITHIN 2 METRES OF HAZARD AREAS, INCLUDING LIKELY AREAS OF CONCENTRATED OR HIGH VELOCITY FLOWS SUCH AS WATERWAYS. WHERE THEY ARE BETWEEN 2 AND 5 METRES FROM SUCH AREAS, SPECIAL SEDIMENT CONTROL MEASURES SHOULD BE TAKEN TO MINIMISE POSSIBLE POLLUTION TO DOWNSLOPE WATERS, E.G. THROUGH INSTALLATION OF SEDIMENT FENCING.

E8. WATER WILL BE PREVENTED FROM ENTERING THE PERMANENT DRAINAGE SYSTEM UNLESS IT IS RELATIVELY SEDIMENT FREE, I.E. THE CATCHMENT AREA HAS BEEN PERMANENTLY LANDSCAPED AND/OR ANY LIKELY SEDIMENT HAS BEEN FILTERED THROUGH AN APPROVED STRUCTURE.

E9. TEMPORARY SOIL AND WATER MANAGEMENT STRUCTURES WILL BE REMOVED ONLY AFTER THE LANDS THEY ARE PROTECTING ARE REHABILITATED.

OTHER MATTERS

E10. ACCEPTABLE RECEPTORS WILL BE PROVIDED FOR CONCRETE AND MORTAR SLURRIES, PAINTS, ACID WASHINGS, LIGHT-WEIGHT WASTE MATERIALS AND LITTER.

E11. RECEPTORS FOR CONCRETE AND MORTAR SLURRIES, PAINTS, ACID WASHINGS, LIGHT-WEIGHT WASTE MATERIALS AND LITTER ARE TO BE EMPTIED AS NECESSARY. DISPOSAL OF WASTE SHALL BE IN A MANNER APPROVED BY THE SITE SUPERINTENDENT.

SITE INSPECTION & MAINTENANCE

E12. EROSION AND SEDIMENT CONTROL MEASURES SHALL BE INSPECTED AFTER RAINFALL EVENTS TO ENSURE THAT THEY OPERATE EFFECTIVELY. REPAIR AND OR MAINTENANCE SHALL BE UNDERTAKEN AS REQUIRED.

THESE DESIGNS, DRAWINGS AND SPECIFICATIONS ARE COPYRIGHT AND THE PROPERTY OF SCP CONSULTING AND MUST NOT BE USED, REPRODUCED OR COPIED WHOLLY OR IN PART WITHOUT THE WRITTEN PERMISSION OF SCP CONSULTING

DIAL BEFORE YOU DIG
www.1100.com.au

Rev	Revision Description	Date
F	ISSUE FOR DA	02.07.2019
E	ISSUE FOR DA	26.06.2019
D	ISSUE FOR DA	21.06.2019
C	100% DESIGN DEVELOPMENT	22.05.2019
B	ISSUE FOR DA	26.04.2019
A	50% DESIGN DEVELOPMENT	15.04.2019

scp engineers and development consultants
L2 Danchen House
507 Kent St Sydney NSW 2000
ABN 80 003 076 024
T (02) 9267 9312
mail@scpconsult.com.au
www.scpconsult.com.au

Client
FDC

Project
NATIONAL HERBARIUM OF NSW

Title
SOIL SEDIMENT AND EROSION DETAILS

Scale
AS SHOWN AT A1

Drawn	Checked	Approved
LW	MP	---

Project Number	Drawing Number	Revision
180111	C5.02	F

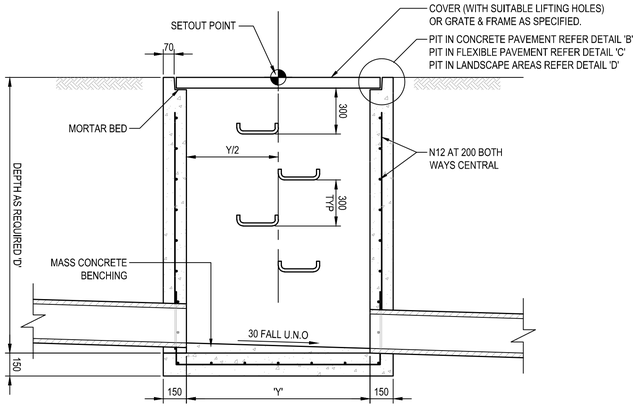

SECTION PA1 -
SCALE 1:20

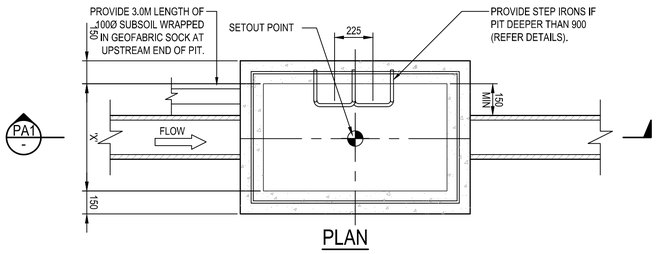

PLAN

SURFACE INLET/JUNCTION PIT
PIT TYPE 'A'
SCALE 1:20

MINIMUM INTERNAL PIT DIMENSIONS		
'D'	'X'	'Y'
D ⩽ 600	450	450*
D ⩽ 900	600	600*
D ⩽ 1200	600	900
D > 1200	900	900

NOTE: PITS DENOTED * SHALL BE USED ONLY WHERE SPECIFIED IN DRAINAGE SCHEDULE OR ON PLAN.

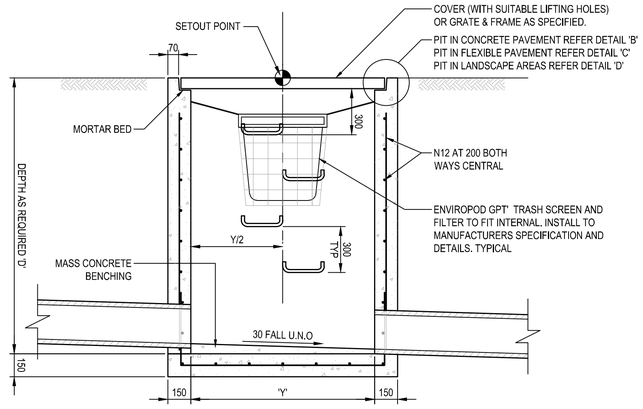

SECTION PA1 -
SCALE 1:20

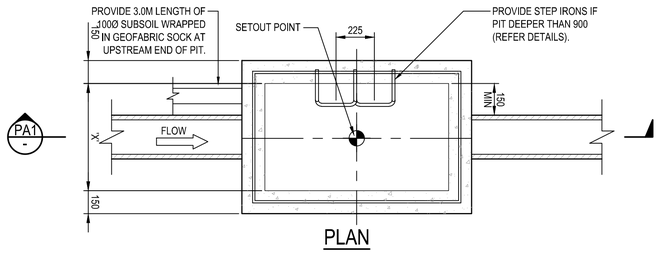

PLAN

SURFACE INLET/JUNCTION PIT WITH ENVIROPODS
PIT TYPE 'A'
SCALE 1:20

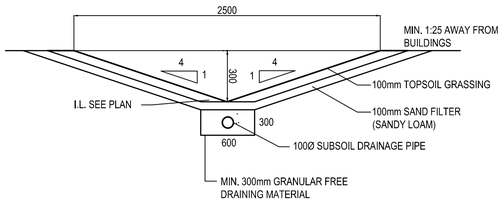

TYPICAL SECTION THROUGH GRASS LINED SWALE
N.T.S.

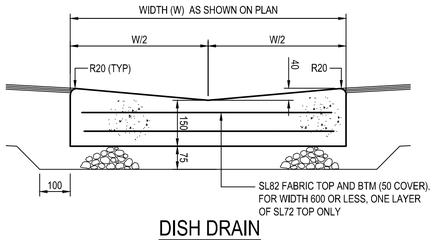

DISH DRAIN
SCALE 1:10

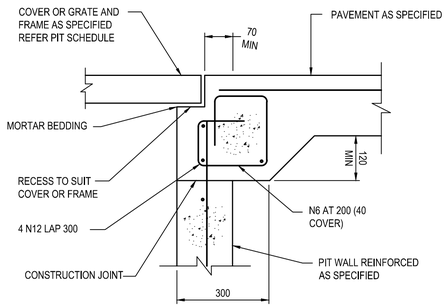

PIT EDGE DETAIL 'B'
SCALE 1:10

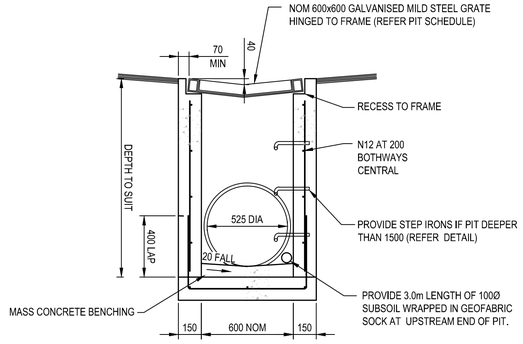

SECTION PE1 -
SCALE 1:20

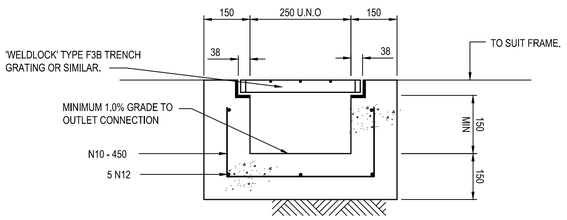

GRATED DRAIN TYPE 'B'
SCALE 1:10

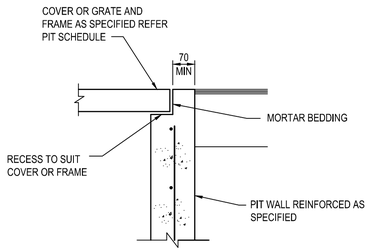

PIT EDGE DETAIL 'C'
SCALE 1:10

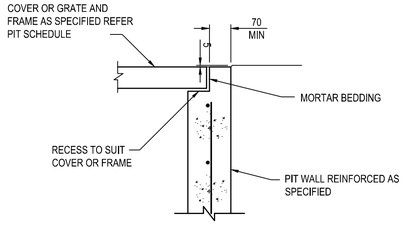

PIT EDGE DETAIL 'D'
SCALE 1:10

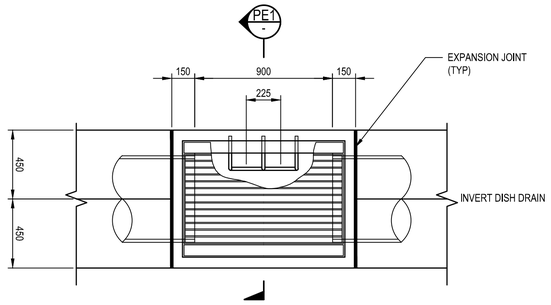

DISH DRAIN PIT TYPE 'E'
SCALE 1:20

THESE DESIGNS, DRAWINGS AND SPECIFICATIONS ARE COPYRIGHT AND THE PROPERTY OF SCP CONSULTING AND MUST NOT BE USED, REPRODUCED OR COPIED WHOLLY OR IN PART WITHOUT THE WRITTEN PERMISSION OF SCP CONSULTING

DIAL BEFORE YOU DIG www.1100.com.au

Rev	Revision Description	Date
G	ISSUE FOR DA	02.07.2019
F	ISSUE FOR DA	26.06.2019
E	ISSUE FOR DA	21.06.2019
D	100% DESIGN DEVELOPMENT	28.05.2019
C	100% DESIGN DEVELOPMENT	22.05.2019
B	ISSUE FOR DA	26.04.2019
A	50% DESIGN DEVELOPMENT	15.04.2019

scp engineers and development consultants
L2 Danchen House
507 Kent St Sydney NSW 2000
ABN 80 003 076 024
T (02) 9267 9312
mail@scpconsult.com.au
www.scpconsult.com.au

Client: FDC

Project: NATIONAL HERBARIUM OF NSW

Title: **CIVIL DETAILS - SHEET 1**

Scale: AS SHOWN AT A1

Drawn	Checked	Approved
LW	MP	---

Project Number	Drawing Number	Revision
180111	C7.01	G

PLOTTED BY CAD 03/4/2019 8:44:06 AM SCP Consulting, File Path: R:\180111 Mount Annan Botanical Gardens Herbarium\07. CAD\BIM\Drawings\180111_C7.01 DETAILS.dwg

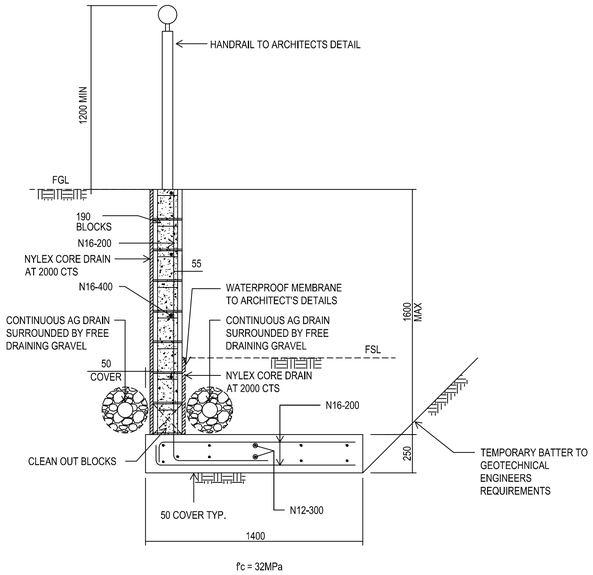

f'c = 32MPa

TYPICAL RETAINING WALL - TYPE D

N.T.S.

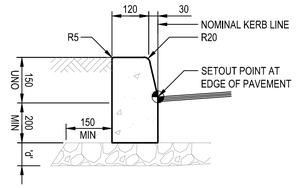

KERB ONLY (KO)

SCALE 1:10
NOTE:
'd' = SUBBASE THICKNESS TO MATCH DEPTH OF PAVEMENT SUBBASE, BUT NOT LESS THAN 75

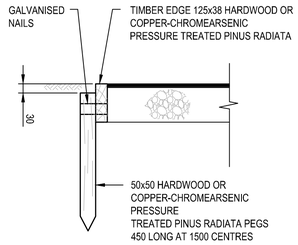

TIMBER EDGE STRIP DETAIL (TE)

SCALE 1:10

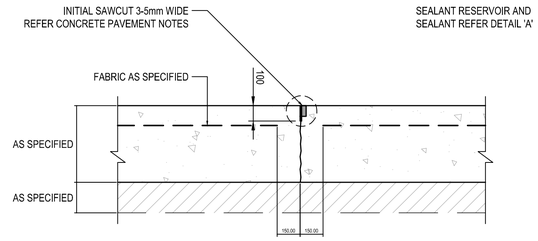

SAW CONTRACTION JOINT

SCALE 1:10
SHOWN AS 'SJ' ON PLAN

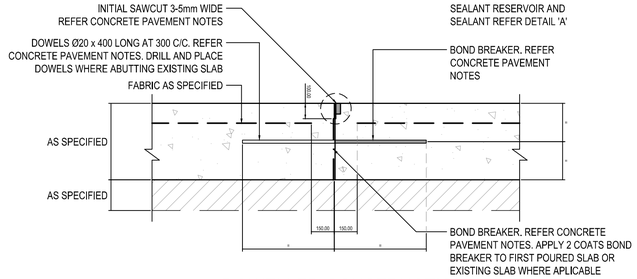

DOWELLED CONSTRUCTION JOINT

SCALE 1:10
SHOWN AS 'DJ' ON PLAN

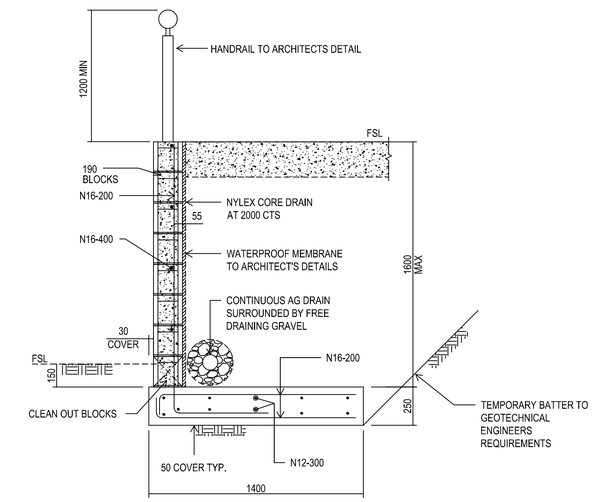

f'c = 32MPa

TYPICAL RETAINING WALL - TYPE E

N.T.S.

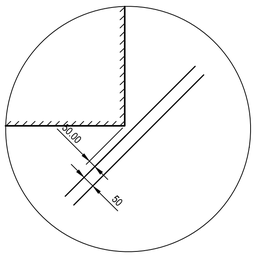

AT CORNERS

2-N16 CORNER BARS
TOP & BOTTOM x 1200
LONG TIED UNDER
REINFORCEMENT.

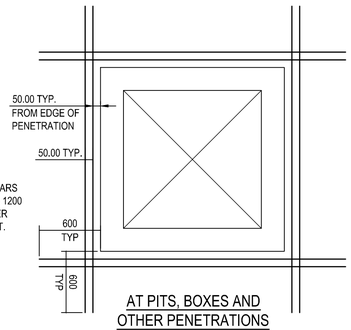

AT PITS, BOXES AND
OTHER PENETRATIONS

TYPICAL TRIMMER BAR DETAIL

SCALE 1:20

1. TRIMMER BARS:
   1.1. TO BE CONSTRUCTED AT ALL PENETRATIONS IN AIRCRAFT/VEHICLE CONCRETE PAVEMENTS INCLUDING BUT NOT LIMITED TO:
   - ALL SERVICE PITS
   - ALL DRAINAGE STRUCTURES
   - ALL VALVE BOXES
   - ALL IN-GROUND FIRE HYDRANTS
   - ALL PROTRUDING CORNERS OF STRUCTURES OR SLABS
   - ALL COLUMNS PENETRATING CONCRETE PAVEMENT
2. CONSTRUCT 2-N16 TRIMMER BARS (1200LONG, TOP AND BOTTOM) AT ALL MISMATCHED OR DISCONTINUOUS JOINTS. TYPICAL

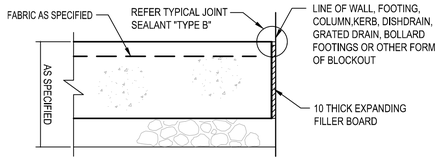

TYPICAL ISOLATION JOINT DETAIL

SHOWN AS 'IJ' ON PLAN AND TO ALSO BE CONSTRUCTED IN LOCATIONS WHERE CONCRETE PAVEMENTS ABUT FORMS OF BLOCKOUT AS SPECIFIED BY THIS ISOLATION JOINT DETAIL UNLESS NOTIFIED OTHERWISE.

N.T.S.

THESE DESIGNS, DRAWINGS AND SPECIFICATIONS ARE COPYRIGHT AND THE PROPERTY OF SCP CONSULTING AND MUST NOT BE USED, REPRODUCED OR COPIED WHOLLY OR IN PART WITHOUT THE WRITTEN PERMISSION OF SCP CONSULTING

DIAL BEFORE YOU DIG
www.1100.com.au

Rev	Revision Description	Date
I	ISSUE FOR DA	02.07.2019
H	ISSUE FOR DA	27.06.2019
G	ISSUE FOR DA	26.06.2019
F	ISSUE FOR DA	21.06.2019
E	100% DESIGN DEVELOPMENT	17.06.2019
D	100% DESIGN DEVELOPMENT	28.05.2019
C	100% DESIGN DEVELOPMENT	22.05.2019
B	ISSUE FOR DA	26.04.2019
A	50% DESIGN DEVELOPMENT	15.04.2019

scp engineers and development consultants
L2 Danchen House
507 Kent St Sydney NSW 2000
ABN 80 003 076 024
T (02) 9267 9312
mail@scpconsult.com.au
www.scpconsult.com.au

Client: FDC

Project: NATIONAL HERBARIUM OF NSW

Title: **CIVIL DETAILS - SHEET 2**

Scale: AS SHOWN AT A1

Drawn	Checked	Approved
LW	MP	---

Project Number	Drawing Number	Revision
180111	C7.02	I

PLOTTED BY CAD 03/06/2019, 8:56:13 AM SCP Consulting, File Path: K:\180111 Mount Annan Botanical Gardens Herbarium\07 Civil\BIM\Drawings\180111_C7.01 DETAILS.dwg

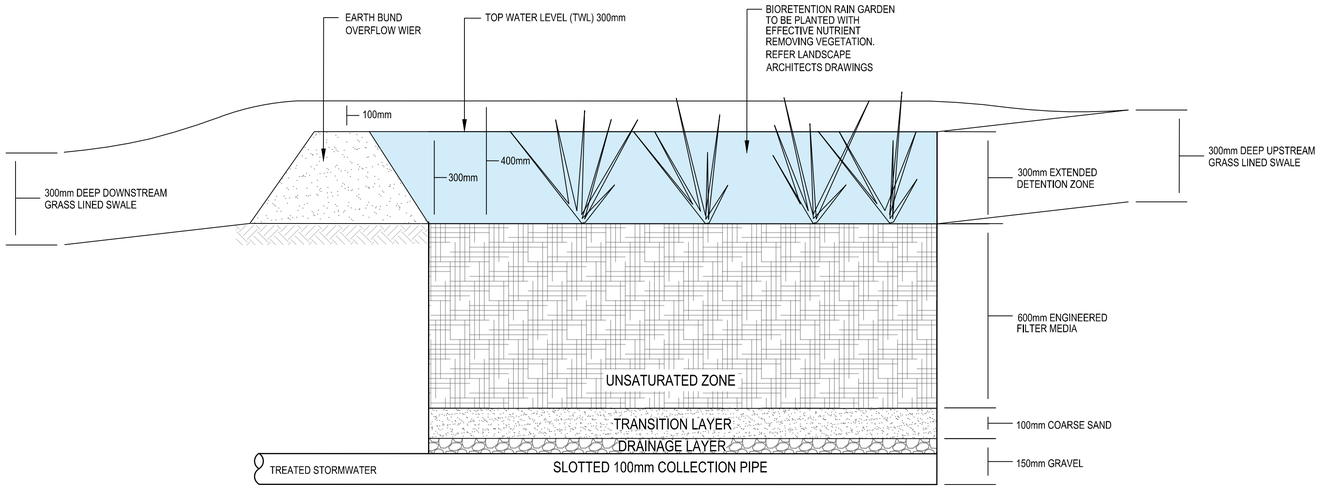

BIORETENTION RAIN GARDEN SECTION A

NTS

NOTES:

ENGINEERED FILTER MEDIA, COARSE SAND AND GRAVEL LAYERS
TO BE SUPPLIED IN ACCORDANCE WITH THE FAWB GUIDELINES
FOR FILTER MEDIA IN BIOFILTRATION SYSTEMS (2009)

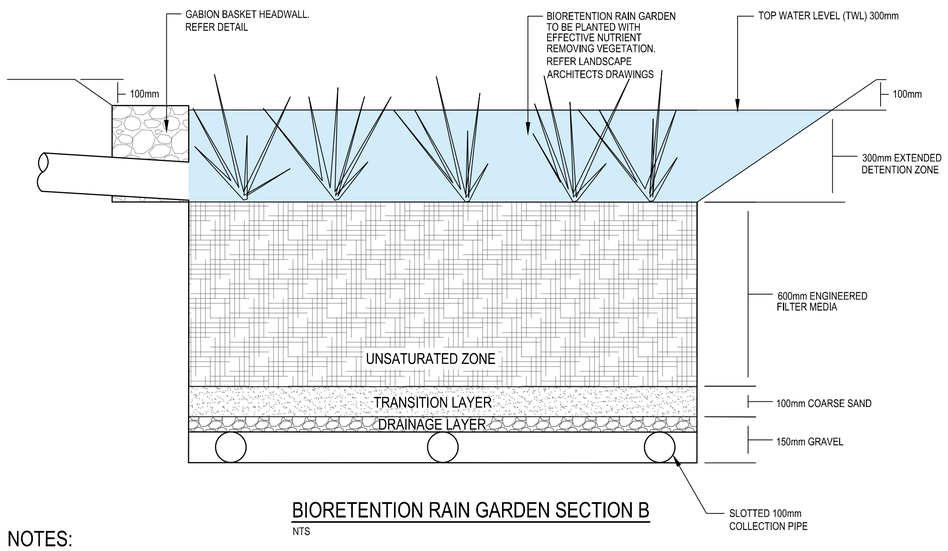

BIORETENTION RAIN GARDEN SECTION B

NTS

NOTES:

ENGINEERED FILTER MEDIA, COARSE SAND AND GRAVEL LAYERS
TO BE SUPPLIED IN ACCORDANCE WITH THE FAWB GUIDELINES
FOR FILTER MEDIA IN BIOFILTRATION SYSTEMS (2009)

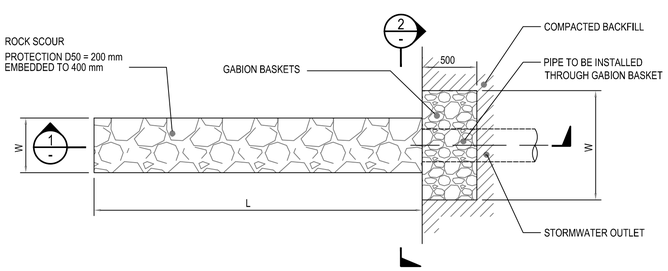

GABION BASKET HEADWALL

SCALE 1:10

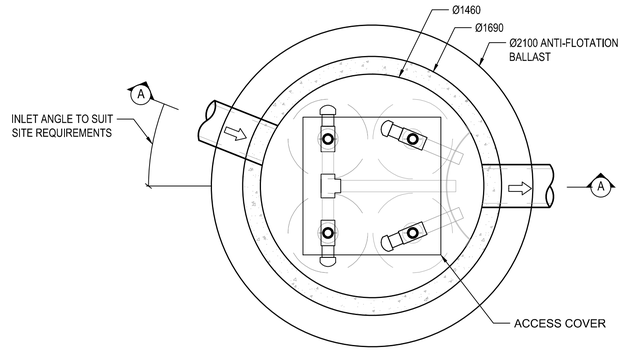

PLAN

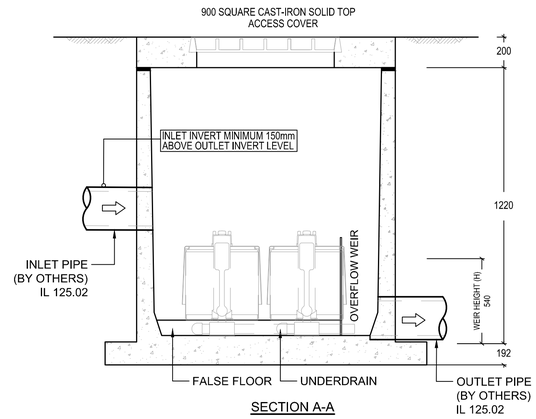

SECTION A-A

HERBARIUM - SQID No.3

NTS

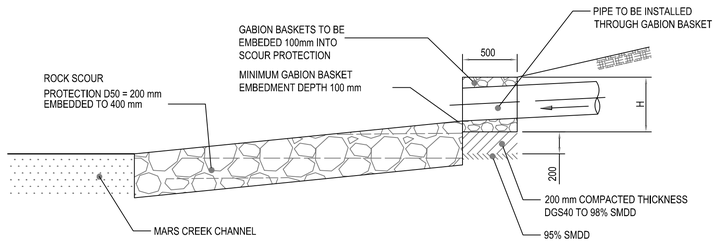

SECTION 1 -
SCALE 1:10

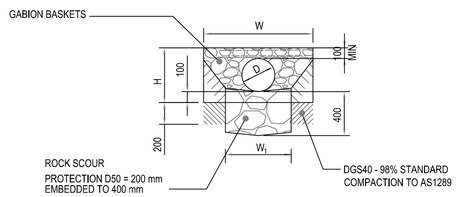

SECTION 2 -
SCALE 1:10

GABION DIMENSIONS		
OUTLET PIPE Ø (mm)	W (mm)	H (mm)
225	500	500
300	600	600

SCOUR PROTECTION DIMENSIONS		
OUTLET PIPE Ø (mm)	W_1 (mm)	H (mm)
225	700	1200
300	900	1500

THESE DESIGNS, DRAWINGS AND SPECIFICATIONS ARE COPYRIGHT AND THE PROPERTY OF SCP CONSULTING AND MUST NOT BE USED, REPRODUCED OR COPIED WHOLLY OR IN PART WITHOUT THE WRITTEN PERMISSION OF SCP CONSULTING

DIAL BEFORE YOU DIG
www.1100.com.au

Rev	Revision Description	Date
F	ISSUE FOR DA	09.07.2019
E	ISSUE FOR DA	02.07.2019
D	ISSUE FOR DA	26.06.2019
C	ISSUE FOR DA	21.06.2019
B	100% DESIGN DEVELOPMENT	17.06.2019
A	100% DESIGN DEVELOPMENT	28.05.2019

scp engineers and development consultants
L2 Danchen House
507 Kent St Sydney NSW 2000
ABN 80 003 076 024
T (02) 9267 9312
mail@scpconsult.com.au
www.scpconsult.com.au

Client: FDC

Project: NATIONAL HERBARIUM OF NSW

Title: **CIVIL DETAILS HERBARIUM - SHEET 3**

Scale: AS SHOWN AT A1

Drawn	Checked	Approved
LW	MP	---

Project Number	Drawing Number	Revision
180111	C7.03	F

PLOTTED BY CAD 09/06/2019 - 4:06:43 PM SCP Consulting File Path: K:\180111 Mount Annan Botanical Gardens Herbarium\07. CAD\BIM\Drawings\180111_C7.01 DETAILS.dwg